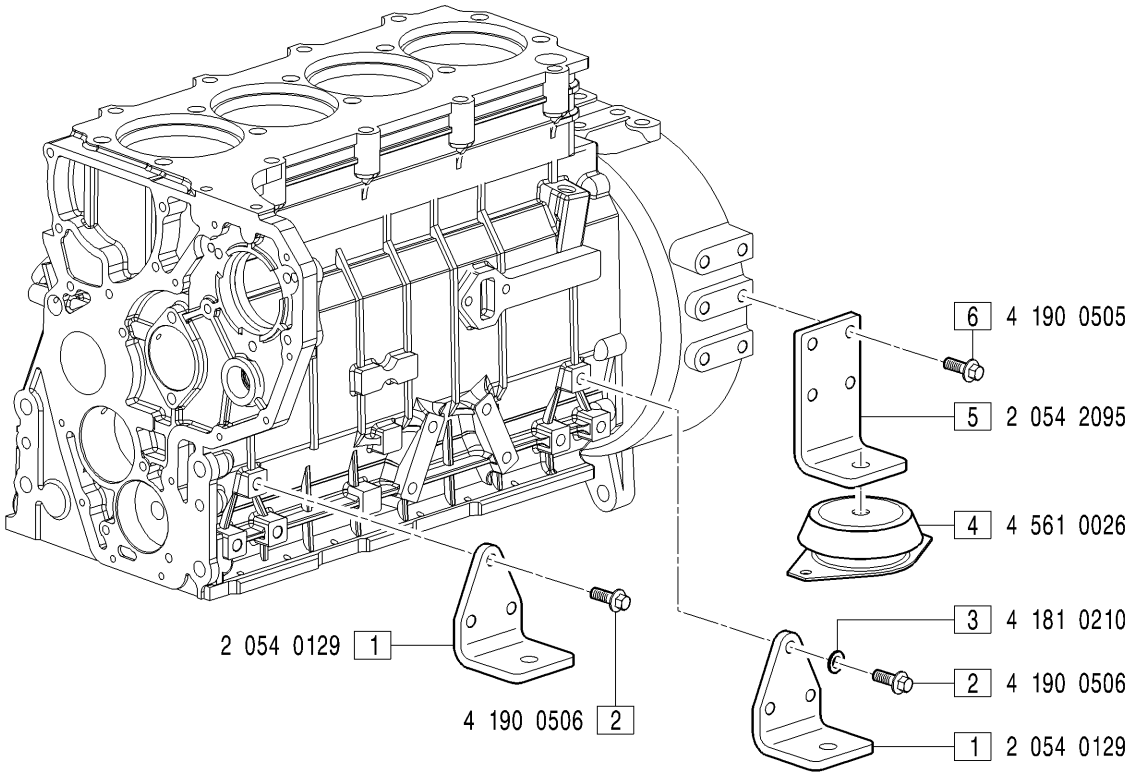


**GRUPPI STAFFE SUPPORTO MOTORE** - *Engine mountings groups*

**DAP0001** : FIGG.1-2-3; **DAP0015** : FIGG.1-2-5-6; **DAP0021** :DAP0015+FIG.4;

| MODIFICATIONS-MODIFICHE-ÄNDERUNGEN-MODIFICACIÓN | | | | | | |
|---|---|---|---|---|---|---|
| Pos. N. | Code Codice | SIMBOLS SIMBOLI △ | ▲ | ⧄ | EC | Up to serial nr. Fino a matricola |

| Pos. N. | DESCRIPTION DESCRIZIONE | Quantity (Q.tà) 754 | | | |
|---|---|---|---|---|---|
| 1 | BRACKET | 4 | | | |
| 2 | SCREW | 12 | | | |
| 3 | WASHER | 2 | | | |
| 4 | VIBRATION DAMPER | 4 | | | |
| 5 | BRACKET | 2 | | | |
| 6 | SCREW | 8 | | | |