Gruppo base - *Common items*

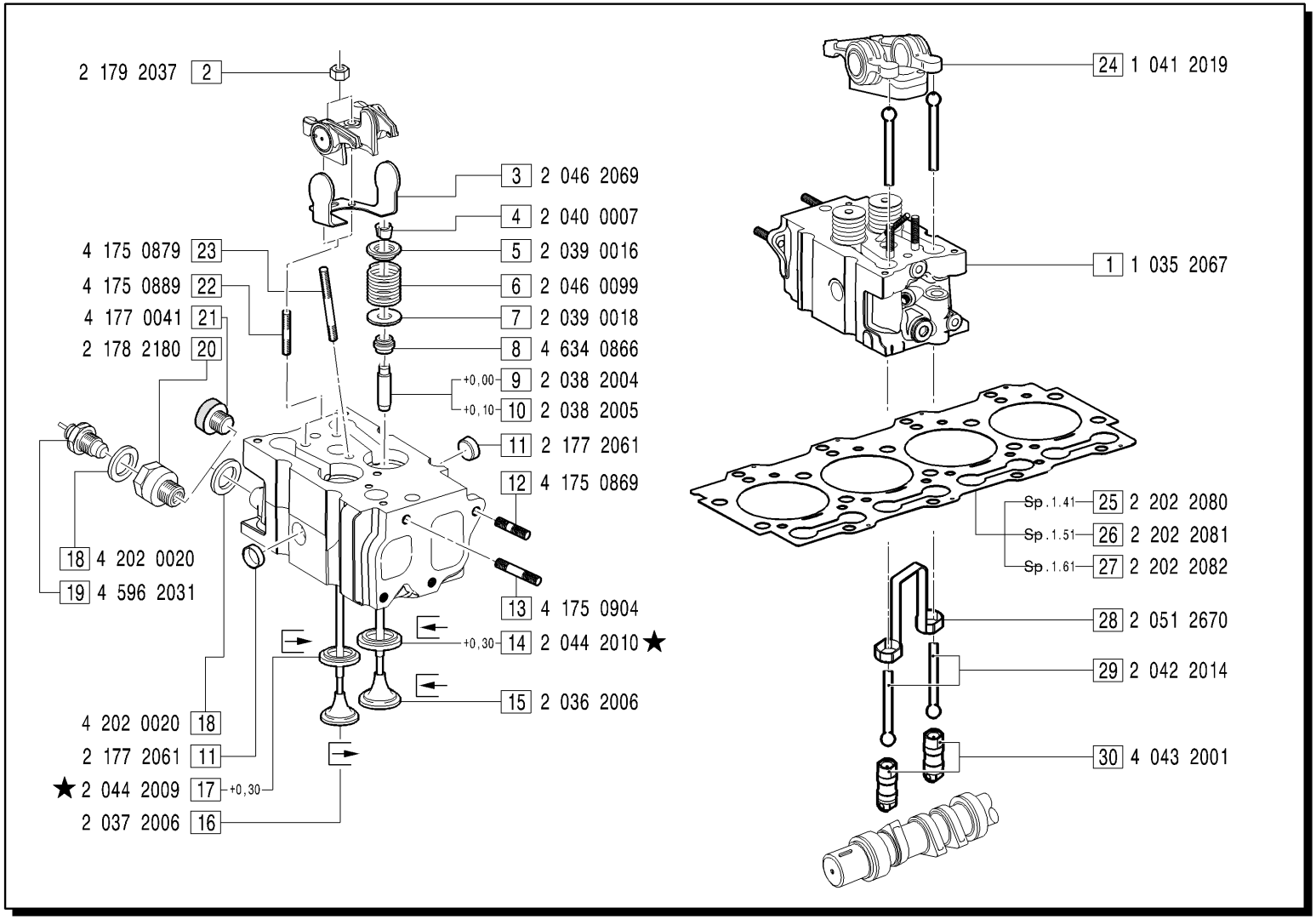

MODIFICATIONS-MODIFICHE-ÄNDERUNGEN-MODIFICACIÓN						
Pos. N.	Code Codice	SIMBOLS SIMBOLI △	▲	⧄	EC	Up to serial nr. Fino a matricola
14	2 044 2008				X	
17	2 044 2007				X	

Pos. N.	DESCRIPTION DESCRIZIONE	Quantity (Q.tà) 754			
1	CYLINDER HEAD ASSY	4			
2	NUT	8			
3	SPRING	4			
4	HALF COLLET	16			
5	UPPER SPRING PLATE	8			
6	SPRING	8			
7	LOWER SPRING PLATE	8			
8	SEAL RING	8			
9	VALVE GUIDE +0.00	8			
10	VALVE GUIDE +0.10	8			
11	PLUG	8			
12	STUD	8			
13	STUD	8			
14	INTAKE VALVE SEAT +0.30	4			
15	INTAKE VALVE	4			
16	EXHAUST VALVE	4			
17	EXHAUST VALVE SEAT +0.30	4			
18	GASKET	5			
19	TEMPERATUR TRASMITTER	1			
20	UNION	1			
21	PLUG	1			
22	STUD	8			
23	STUD	4			
24	ROCKER ARM ASSY	4			
25	CYL. HEAD GASKET SP.1.41	1			
26	CYL. HEAD GASKET SP.1.51	1			
27	CYL. HEAD GASKET SP.1.61	1			
28	BRACKET	4			
29	PUSHROD	8			
30	TAPPET	8			