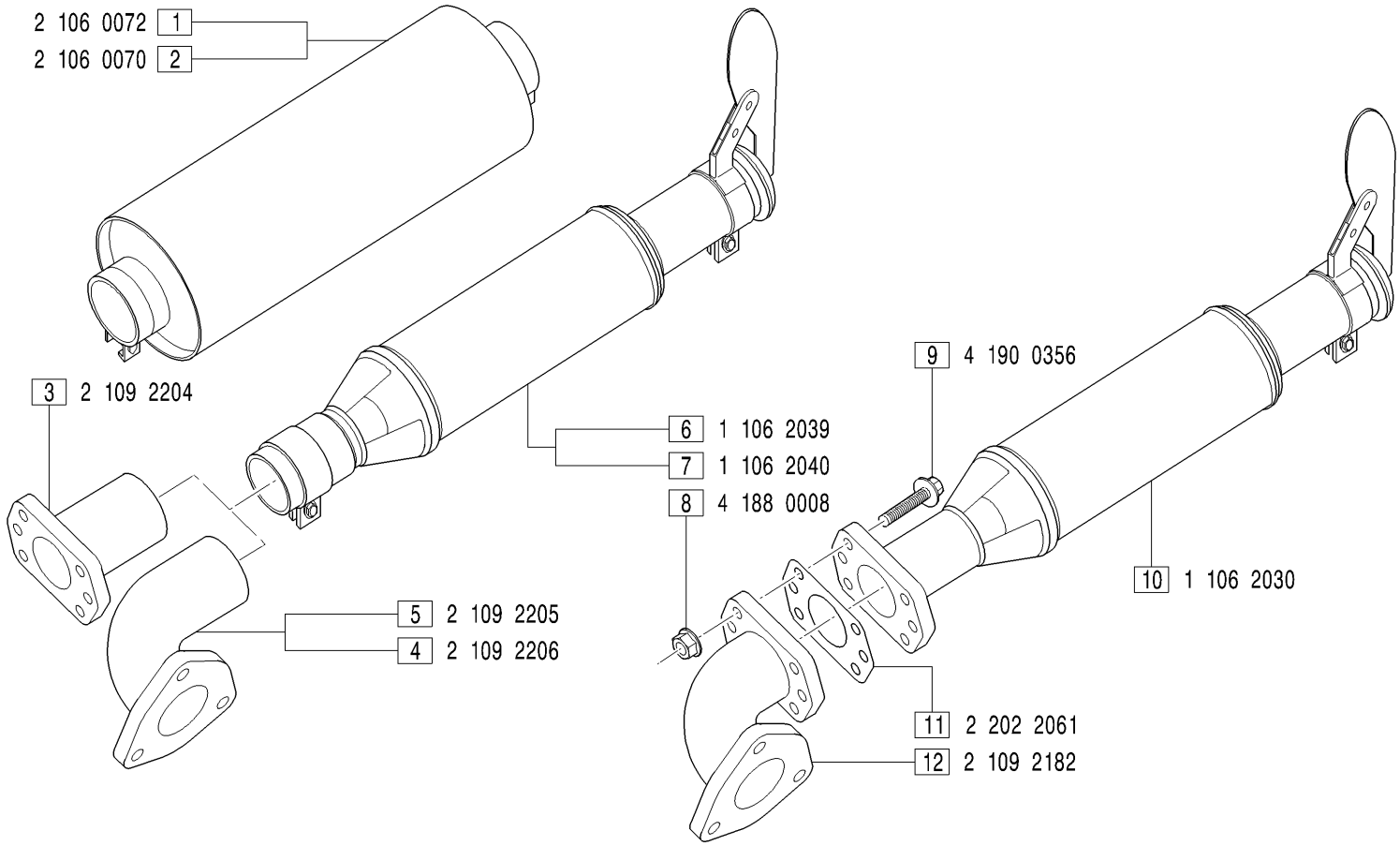

GRUPPI MARMITTE - *Mufflers groups*

MAR0001: FIG.1 **MAR0002**: FIG.2; **MAR0003**: FIGG.3-6;

MAR0004: FIG.4-6; **MAR0005**: FIGG.5-7; **MAR0006**: FIGG.8-9-10-11-12;

MODIFICATIONS-MODIFICHE-ÄNDERUNGEN-MODIFICACIÓN						
Pos. N.	Code Codice	SIMBOLS SIMBOLI △	▲	⧄	EC	Up to serial nr. Fino a matricola

Pos. N.	DESCRIPTION DESCRIZIONE	Quantity (Q.tà) 703	704	706	
1	MUFFLER	1	1		
2	MUFFLER			1	
3	SHEAT	1	1		
4	SHEAT	1			
5	SHEAT			1	
6	MUFFLER ASSY	1	1		
7	MUFFLER ASSY			1	
8	NUT		4		
9	SCREW		4		
10	MUFFLER ASSY		1		
11	GASKET		1		
12	SHEAT		1		