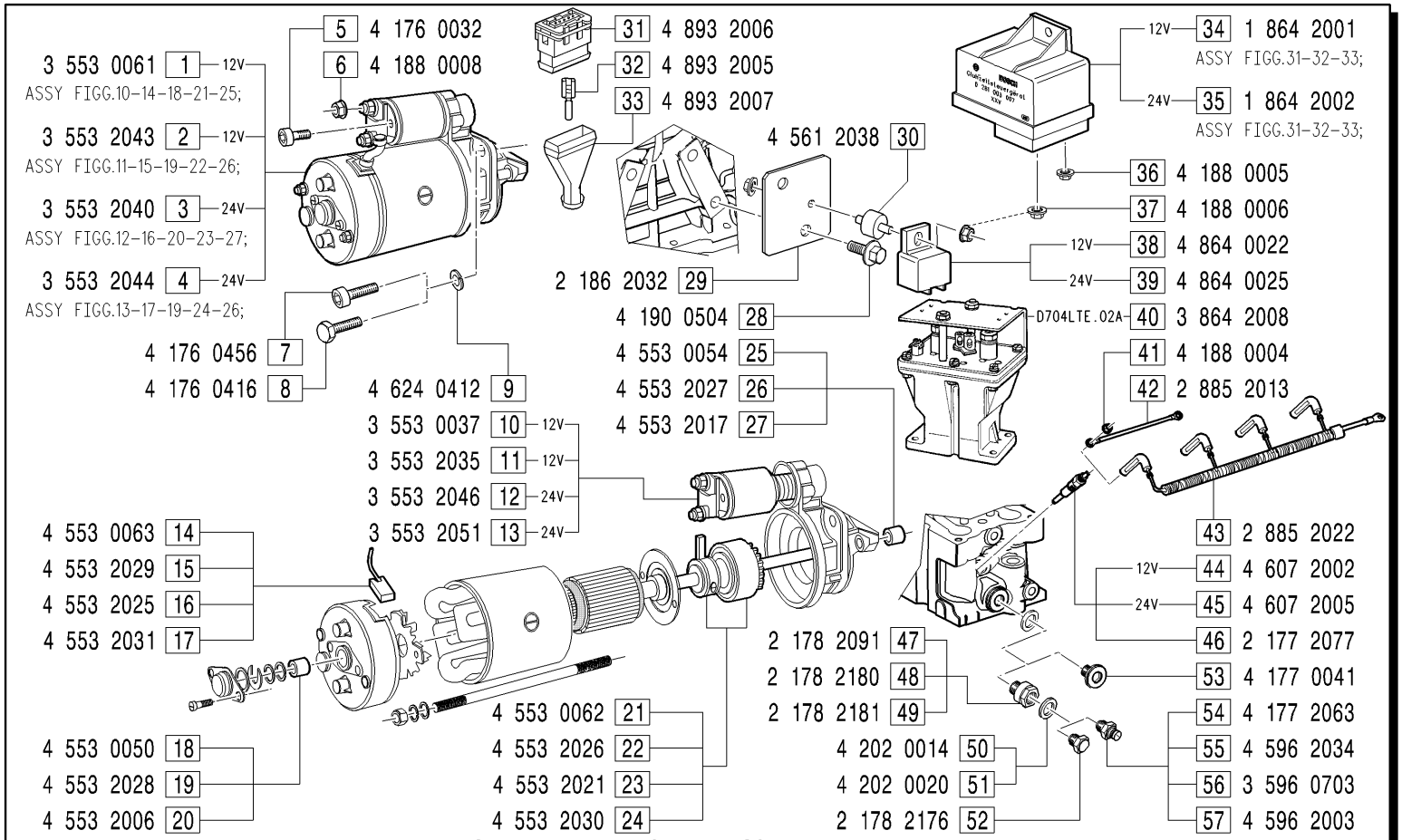

GRUPPI AVVIAMENTO ELETTRICO - *Electric start groups*

AVE0027: FIGG.2-5-6-7-9-34-36-37-38-41-42-44-48-51-55; **AVE0028**: FIGG.4-5-6-7-9-35-36-37-39-43-45-48-51-55;
AVE0035: FIGG.1-8-9-34-36-37-38-41-42-44-48-51-55; **AVE0038**: FIGG.3-8-9-35-36-37-39-43-45-48-51-55; **AVE0044**: FIGG.4-5-6-7-9-34-36-37-38-41-42-44-48-51-52;
AVE0045: FIGG.2-5-6-7-9-38-46-48-51-55; **AVE0046**: FIGG.2-5-6-7-9-34-36-37-38-41-42-44-53; **AVE0050**: FIGG.2-5-6-7-9-34-36-37-38-41-42-44-47-48-50-51-56;
AVE0054: FIGG.2-5-6-7-9-41-42-44-49-51-54; **AVE0057**: FIGG.2-5-6-7-9-34-36-37-38-41-42-44-47-48-50-51-57;
AVE0064: FIGG.2-5-6-7-9-28-29-30-36-37-41-42-44-48-51-55; **AVE0066**: FIGG.2-5-6-7-9-46-48-51-55; **AVE0071**: FIGG.2-5-6-7-9-34-36-37-41-42-44-48-51-55;

MODIFICATIONS MODIFICHE ÄNDERUNGEN MODIFICACIÓN						
Pos. N.	Code Codice	SIMBOLS SIMBOLI △	▲	⧄	EC	Up to serial nr. Fino a matricola

Pos. N.	DESCRIPTION DESCRIZIONE	Quantity (Q.tà) 703	704	706	
1	STARTING MOTOR 12V		1		
2	STARTING MOTOR 12V		1		
3	STARTING MOTOR 24V		1		
4	STARTING MOTOR 24V		1		
5	SCREW		1		
6	NUT		1		
7	SCREW		2		
8	SCREW		2		
9	WASHER		2		
10	ELECTROMAGNET 12V		1		
11	ELECTROMAGNET 12V		1		
12	ELECTROMAGNET 24V		1		
13	ELECTROMAGNET 24V		1		
14	BRUSHES SET		1		
15	BRUSHES SET		1		
16	BRUSHES SET		1		
17	BRUSHES SET		1		
18	BUSHING		1		
19	BUSHING		1		
20	BUSHING		1		
21	PINION GEAR		1		
22	PINION GEAR		1		
23	PINION GEAR		1		
24	PINION GEAR		1		
25	BUSHING		1		
26	BUSHING		1		
27	BUSHING		1		
28	SCREW		2		
29	SUPPORT		1		
30	DAMPER		1		
31	TERMINAL BOARD		1		
32	TERMINAL		5		
33	PROTECTION CAP		1		
34	CONTROL UNIT 12V ASSY		1		