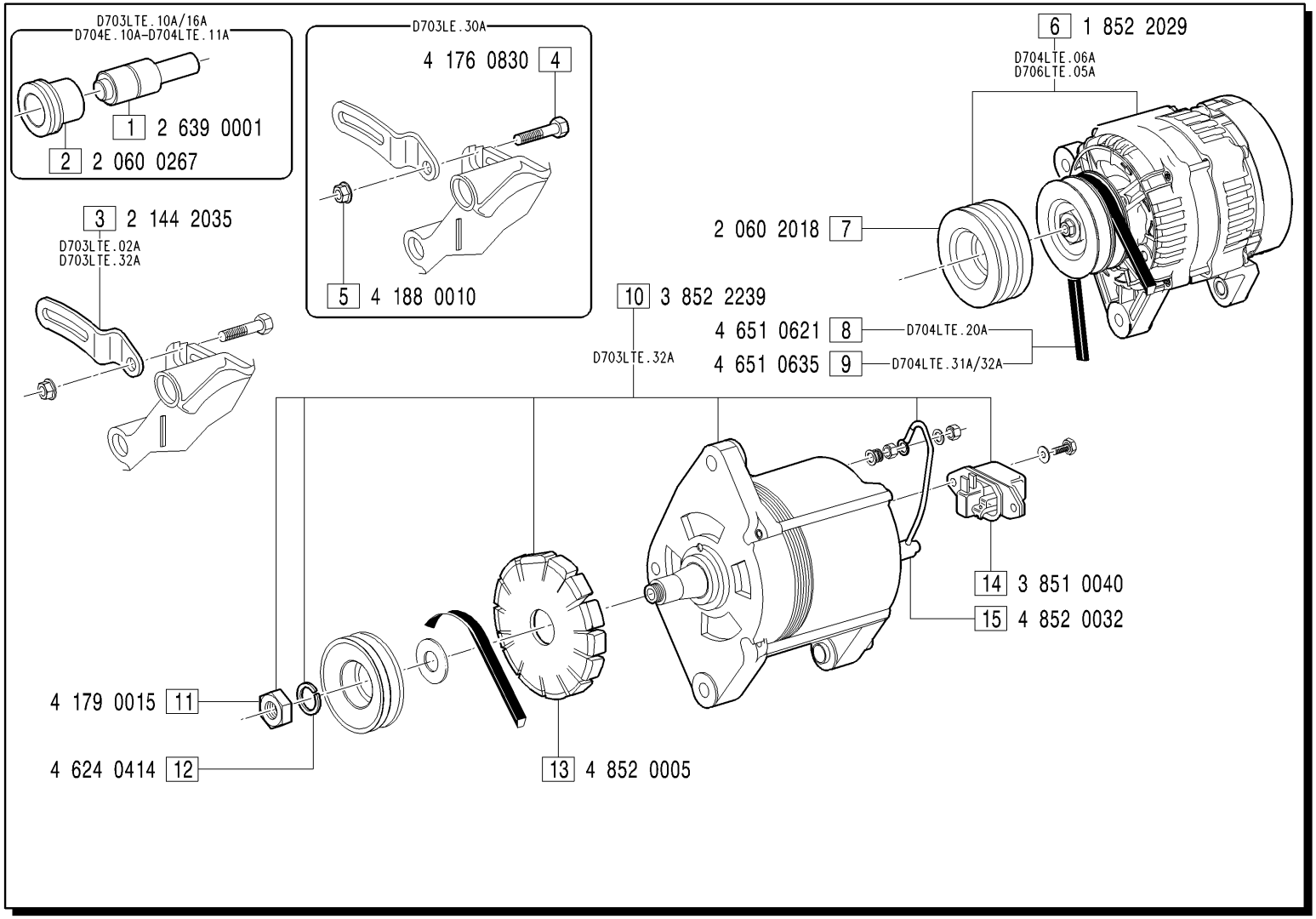


| MODIFICATIONS-MODIFICHE-ÄNDERUNGEN-MODIFICACIÓN | | | | | | |
|---|---|---|---|---|---|---|
| Pos. N. | Code Codice | SIMBOLS SIMBOLI △ | ▲ | ⧄ | EC | Up to serial nr. Fino a matricola |
| | | | | | | |

| Pos. N. | DESCRIPTION DESCRIZIONE | Quantity (Q.tà) 703 | 704 | 706 | |
|---|---|---|---|---|---|
| 1 | BEARING | 1 | 1 | | |
| 2 | PULLEY | 1 | 1 | | |
| 3 | TIE ROD | 1 | | | |
| 4 | SCREW | 1 | | | |
| 5 | NUT | 1 | | | |
| 6 | ALTERNATOR 12V ASSY | | 1 | 1 | |
| 7 | PULLEY | | 1 | | |
| 8 | BELT | | 1 | | |
| 9 | BELT | | 1 | | |
| 10 | ALTERNATOR 12V | 1 | | | |
| 11 | NUT | 1 | | | |
| 12 | WASHER | 1 | | | |
| 13 | FAN | 1 | | | |
| 14 | REGULATOR | 1 | | | |
| 15 | CONDENSER | 1 | | | |