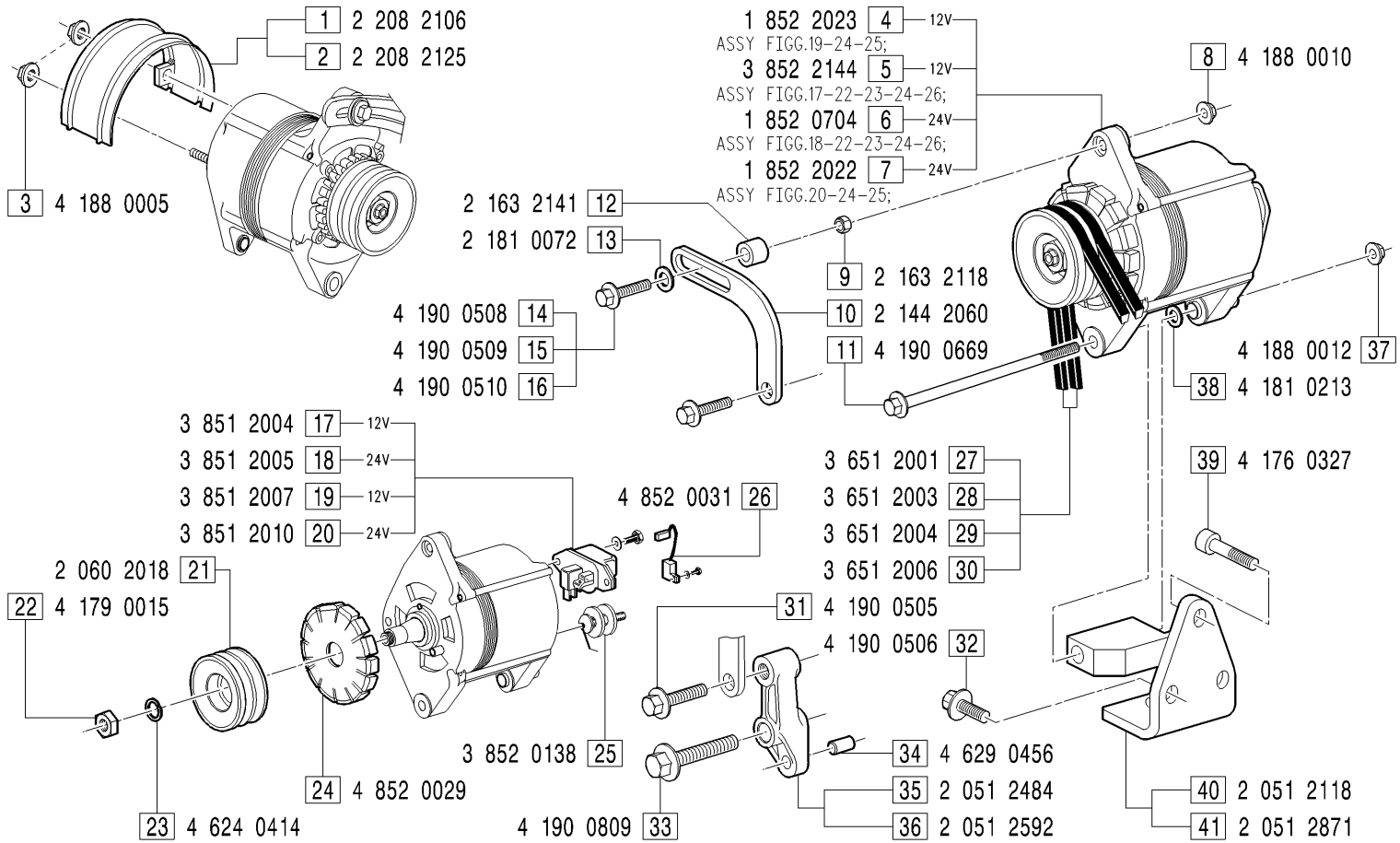

GRUPPI APPLICAZIONE ALTERNATORE - *Alternator application groups*

APA0036: FIGG.1-3-4-8-9-10-11-12-13-16-21-30-31-32-37-38-39-40;

APA0037: FIGG.1-3-7-8-9-10-11-13-15-21-30-31-32-37-38-39-41;

APA0047: FIGG.4-8-9-10-11-12-13-16-21-28-31-32-33-34-35-37-38-39-40;

APA0049: FIGG.5-8-9-10-11-13-14-21-28-31-32-33-34-35-37-38-39-40;

APA0087: FIGG.6-8-9-10-11-13-14-21-29-31-33-34-35-37-38;

APA0088: FIGG.6-8-9-10-11-13-14-21-27-31-33-34-35-37-38;

APA0095: FIGG.2-3-7-8-9-10-11-13-15-21-30-31-32-33-34-36-37-38-39-41;

MODIFICATIONS-MODIFICHE-ÄNDERUNGEN-MODIFICACIÓN

Pos. N.	Code Codice	SIMBOLS SIMBOLI △	▲	⧄	EC	Up to serial nr. Fino a matricola

Pos. N.	DESCRIPTION DESCRIZIONE	Quantity (Q.tà) 703	704	706	
1	PROTECTION ALTERNATOR	1	1	1	
2	PROTECTION ALTERNATOR	1	1	1	
3	NUT	2	2	2	
4	ALTERNATOR ASSY 12V	1	1	1	
5	ALTERNATOR ASSY 12V	1	1	1	
6	ALTERNATOR ASSY 24V	1	1	1	
7	ALTERNATOR ASSY 24V	1	1	1	
8	NUT	1	1	1	
9	SPACER	1	1	1	
10	TIE ROD	1	1	1	
11	SCREW	1	1	1	
12	SPACER	1	1	1	
13	WASHER	1	1	1	
14	SCREW	1	1	1	
15	SCREW	1	1	1	
16	SCREW	1	1	1	
17	REGULATOR 12V	1	1	1	
18	REGULATOR 24V	1	1	1	
19	REGULATOR 12V	1	1	1	
20	REGULATOR 24V	1	1	1	
21	PULLEY	1	1	1	
22	NUT	1	1	1	
23	WASHER	1	1	1	
24	FAN	1	1	1	
25	KIT APPL.CLAMP	1	1	1	
26	CONDENSER	1	1	1	
27	BELT	1	1	1	
28	BELT	1	1	1	
29	BELT	1	1	1	
30	BELT	1	1	1	
31	SCREW	1	1	1	
32	SCREW	2	2	2	
33	SCREW	1	1	1	
34	TAPER PIN	1	1	1	