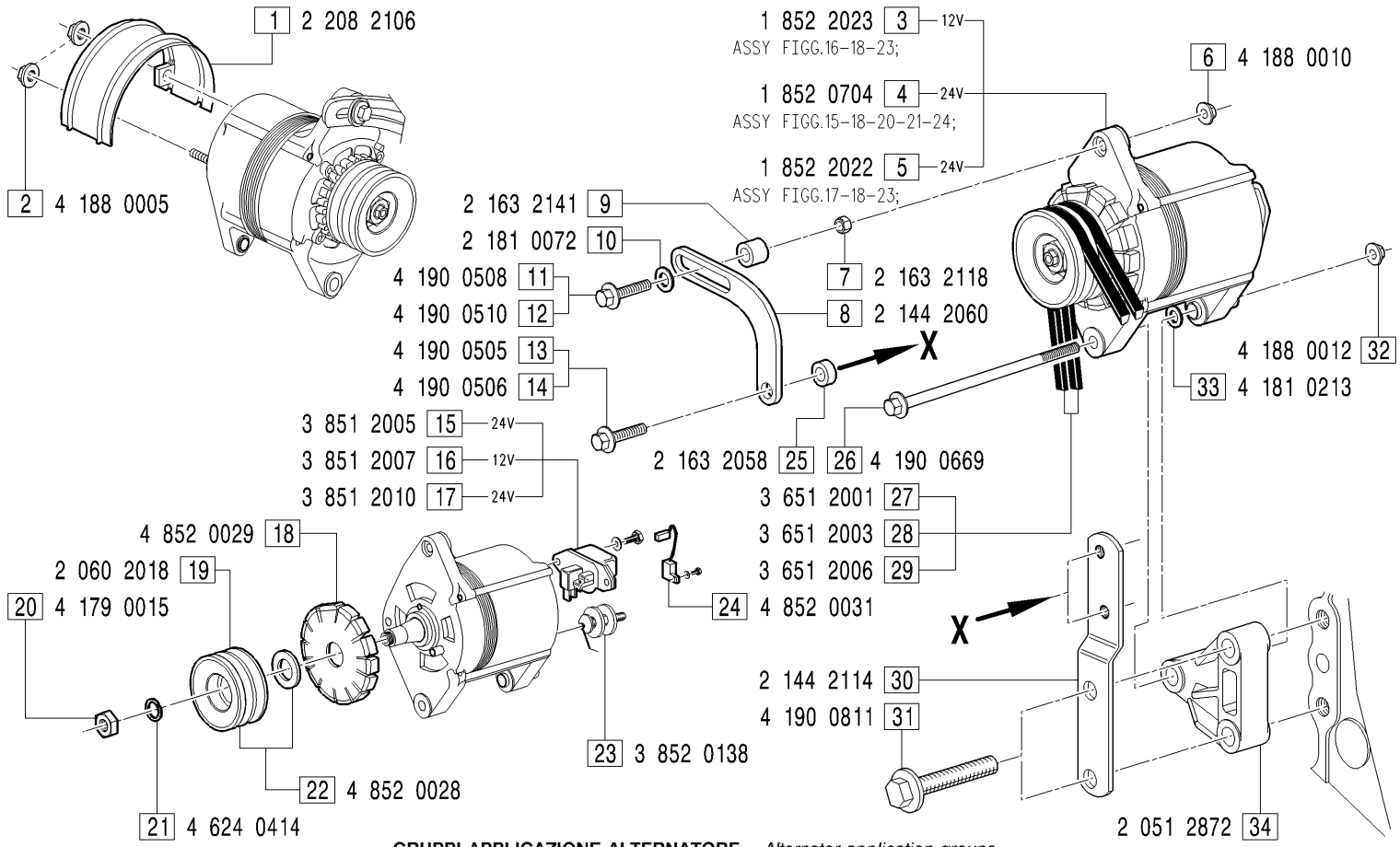

GRUPPI APPLICAZIONE ALTERNATORE - *Alternator application groups*

APA0033: FIGG.1-2-3-6-7-8-10-11-13-19-26-29-30-31-32-33-34;
APA0035: FIGG.1-2-5-6-7-8-10-11-14-19-25-26-29-30-31-32-34;
APA0043: FIGG.3-6-7-8-10-11-13-19-26-27-30-31-32-33-34;
APA0066: FIGG.1-2-5-6-7-8-10-11-14-19-25-26-28-30-31-32-34;
APA0067: FIGG.3-6-7-8-10-11-13-19-26-29-30-31-32-33-34;
APA0086: FIGG.4-6-7-8-9-10-12-13-19-26-29-30-31-32-34;
APA0091: FIGG.4-6-7-8-9-10-12-13-22-26-27-30-31-32-34;

MODIFICATIONS MODIFICHE ÄNDERUNGEN MODIFICACIÓN

Pos. N.	Code Codice	SIMBOLS SIMBOLI △	▲	⧄	EC	Up to serial nr. Fino a matricola

Pos. N.	DESCRIPTION DESCRIZIONE	Quantity (Q.tà) 703	704	706	
1	PROTECTION ALTERNATOR	1	1	1	
2	NUT	2	2	2	
3	ALTERNATOR ASSY 12V	1	1	1	
4	ALTERNATOR ASSY 24V	1	1	1	
5	ALTERNATOR ASSY 24V	1	1	1	
6	NUT	1	1	1	
7	SPACER	1	1	1	
8	TIE ROD	1	1	1	
9	SPACER	1	1	1	
10	WASHER	1	1	1	
11	SCREW	1	1	1	
12	SCREW	1	1	1	
13	SCREW	1	1	1	
14	SCREW	1	1	1	
15	REGULATOR 12V	1	1	1	
16	REGULATOR 24V	1	1	1	
17	REGULATOR 24V	1	1	1	
18	FAN	1	1	1	
19	PULLEY	1	1	1	
20	NUT	1	1	1	
21	WASHER	1	1	1	
22	PULLEY ASSY	1	1	1	
23	KIT APPL.CLAMP	1	1	1	
24	CONDENSER	1	1	1	
25	SPACER	1	1	1	
26	SCREW	1	1	1	
27	BELT	1	1	1	
28	BELT	1	1	1	
29	BELT	1	1	1	
30	TIE ROD	1	1	1	
31	SCREW	2	2	2	
32	NUT	1	1	1	
33	WASHER	1	1	1	
34	ALTERNATOR SUPPORT	1	1	1	