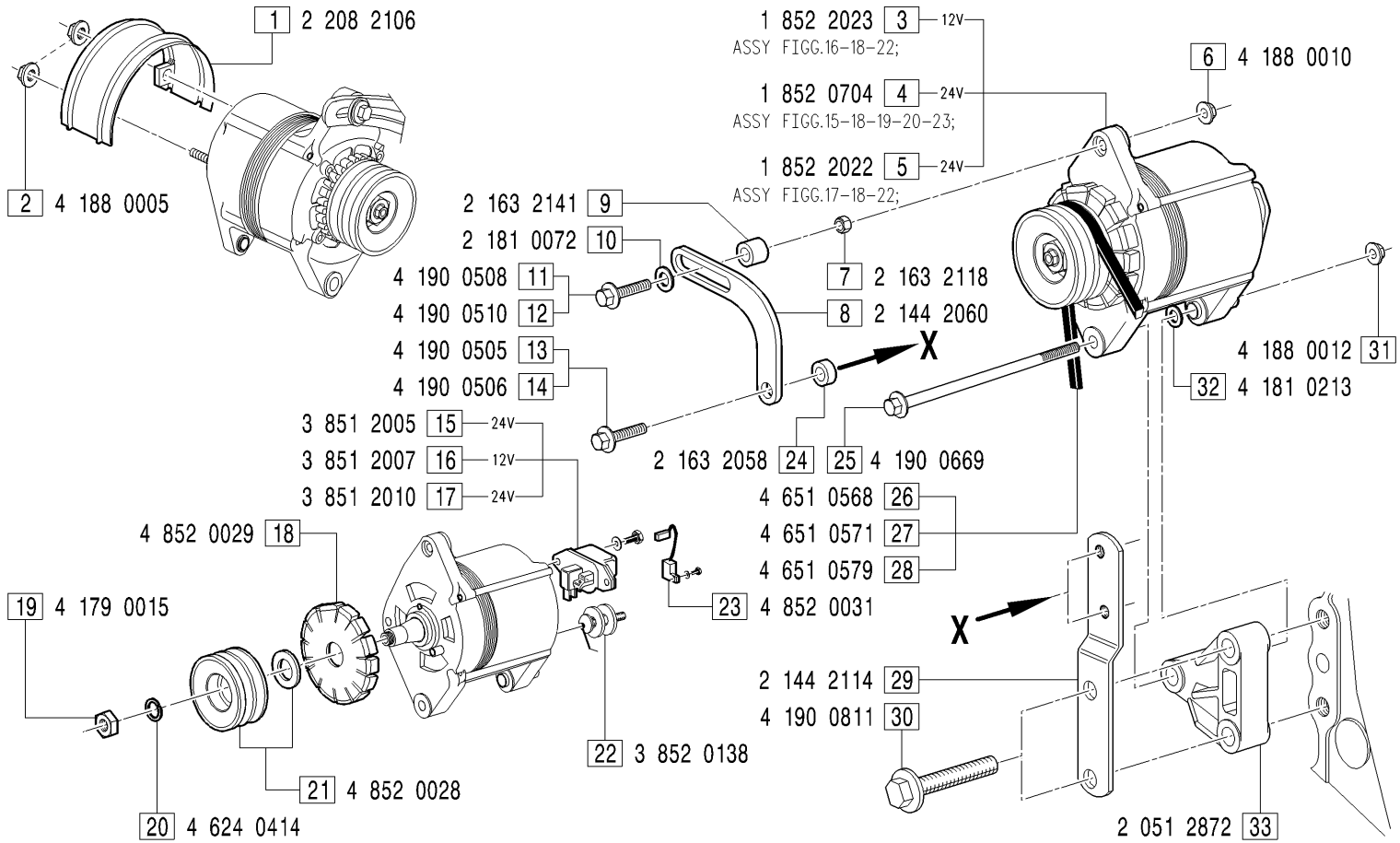

GRUPPI APPLICAZIONE ALTERNATORE - *Alternator application groups*

APA0031: FIGG.1-2-3-6-7-8-10-11-13-21-25-27-29-30-31-32-33;

APA0032: FIGG.4-6-7-8-9-10-12-13-21-25-27-29-30-31-33;

APA0034: FIGG.1-2-5-6-7-8-10-11-14-21-24-25-27-29-30-31-33;

APA0092: FIGG.4-6-7-8-9-10-12-13-21-25-26-29.30.31-33;

APA0093: FIGG.4-6-7-8-9-10-12-13-21-25-28-29-30-31-33;

MODIFICATIONS-MODIFICHE-ÄNDERUNGEN-MODIFICACIÓN

Pos. N.	Code Codice	SIMBOLS SIMBOLI △	▲	⧄	EC	Up to serial nr. Fino a matricola

Pos. N.	DESCRIPTION DESCRIZIONE	Quantity (Q.tà) 703	704	706	
1	PROTECTION ALTERNATOR	1	1	1	
2	NUT	2	2	2	
3	ALTERNATOR ASSY 12V	1	1	1	
4	ALTERNATOR ASSY 24V	1	1	1	
5	ALTERNATOR ASSY 24V	1	1	1	
6	NUT	1	1	1	
7	SPACER	1	1	1	
8	TIE ROD	1	1	1	
9	SPACER	1	1	1	
10	WASHER	1	1	1	
11	SCREW	1	1	1	
12	SCREW	1	1	1	
13	SCREW	1	1	1	
14	SCREW	1	1	1	
15	REGULATOR 12V	1	1	1	
16	REGULATOR 24V	1	1	1	
17	REGULATOR 24V	1	1	1	
18	FAN	1	1	1	
19	NUT	1	1	1	
20	WASHER	1	1	1	
21	PULLEY ASSY	1	1	1	
22	KIT APPL.CLAMP	1	1	1	
23	CONDENSER	1	1	1	
24	SPACER	1	1	1	
25	SCREW	1	1	1	
26	BELT	1	1	1	
27	BELT	1	1	1	
28	BELT	1	1	1	
29	TIE ROD	1	1	1	
30	SCREW	2	2	2	
31	NUT	1	1	1	
32	WASHER	1	1	1	
33	ALTERNATOR SUPPORT	1	1	1	