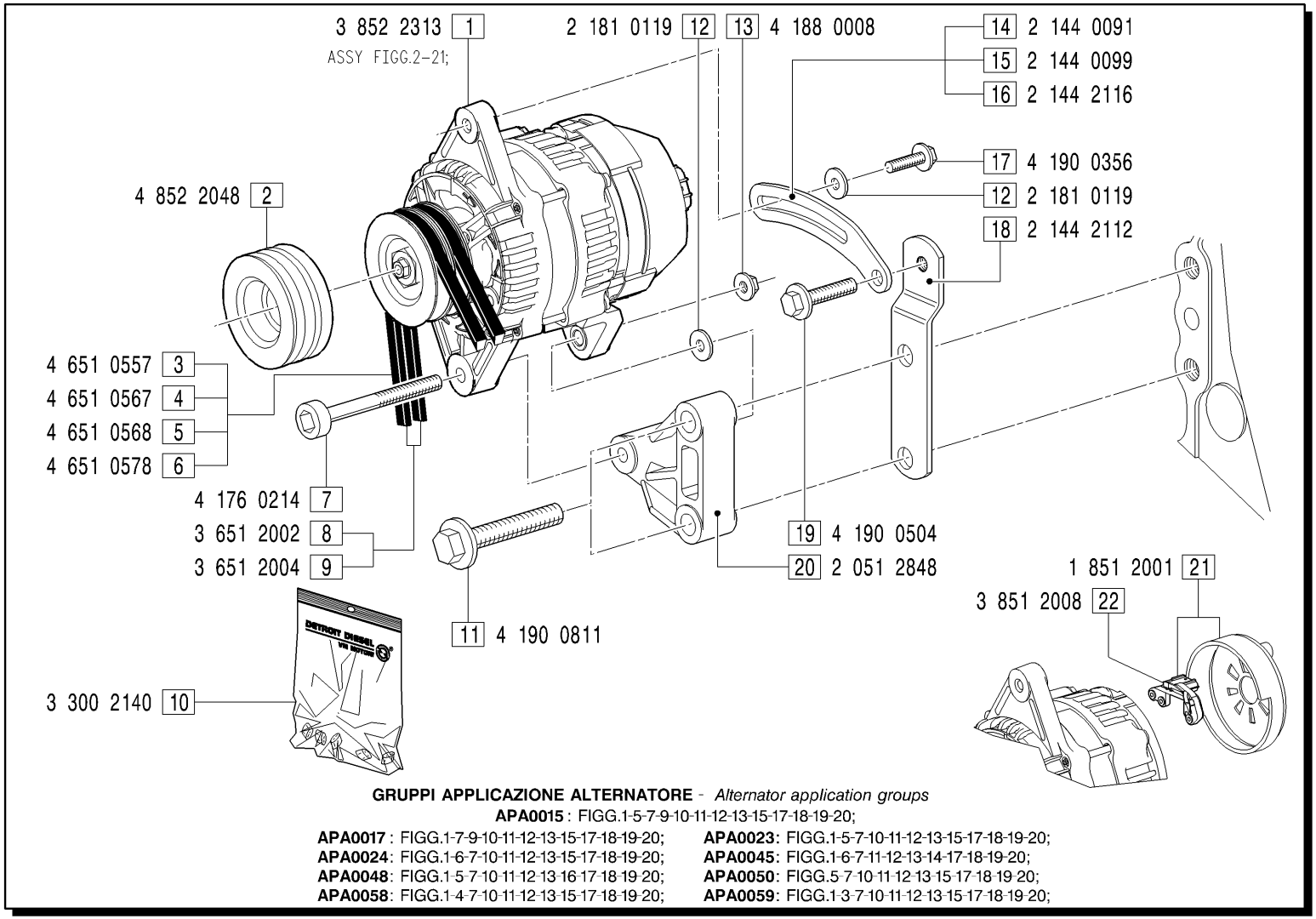

GRUPPI APPLICAZIONE ALTERNATORE - *Alternator application groups*

APA0015 : FIGG.1-5-7-9-10-11-12-13-15-17-18-19-20;

APA0017 : FIGG.1-7-9-10-11-12-13-15-17-18-19-20;
APA0024: FIGG.1-6-7-10-11-12-13-15-17-18-19-20;
APA0048: FIGG.1-5-7-10-11-12-13-16-17-18-19-20;
APA0058: FIGG.1-4-7-10-11-12-13-15-17-18-19-20;
APA0023: FIGG.1-5-7-10-11-12-13-15-17-18-19-20;
APA0045: FIGG.1-6-7-11-12-13-14-17-18-19-20;
APA0050: FIGG.5-7-10-11-12-13-15-17-18-19-20;
APA0059: FIGG.1-3-7-10-11-12-13-15-17-18-19-20;

MODIFICATIONS-MODIFICHE-ÄNDERUNGEN-MODIFICACIÓN						
Pos. N.	Code Codice	SIMBOLS SIMBOLI △	▲	⧄	EC	Up to serial nr. Fino a matricola

Pos. N.	DESCRIPTION DESCRIZIONE	Quantity (Q.tà) 703	704	706		Pos. N.	DESCRIPTION DESCRIZIONE	703	704	706		Pos. N.	DESCRIPTION DESCRIZIONE	703	704	706	
1	ALTERNATOR 12V	1	1	1		8	BELT	1	1	1		17	SCREW	1	1	1	
2	PULLEY	1	1	1		9	BELT	1	1	1		18	TIE ROD	1	1	1	
3	BELT	1	1	1		10	ALTERNATOR KIT	1	1	1		19	SCREW	1	1	1	
4	BELT	2	2	2		11	SCREW	2	2	2		20	ALTERNATOR SUPPORT	1	1	1	
5	BELT	1	1	1		12	WASHER	2	2	2		21	REGULATOR KIT 12V	1	1	1	
6	BELT	1	1	1		13	NUT	1	1	1		22	REGULATOR 12V	1	1	1	
7	SCREW	1	1	1		14	TIE ROD	1	1	1							
						15	TIE ROD	1	1	1							
						16	TIE ROD	1	1	1							