D 704 LTE - D 706 LTE

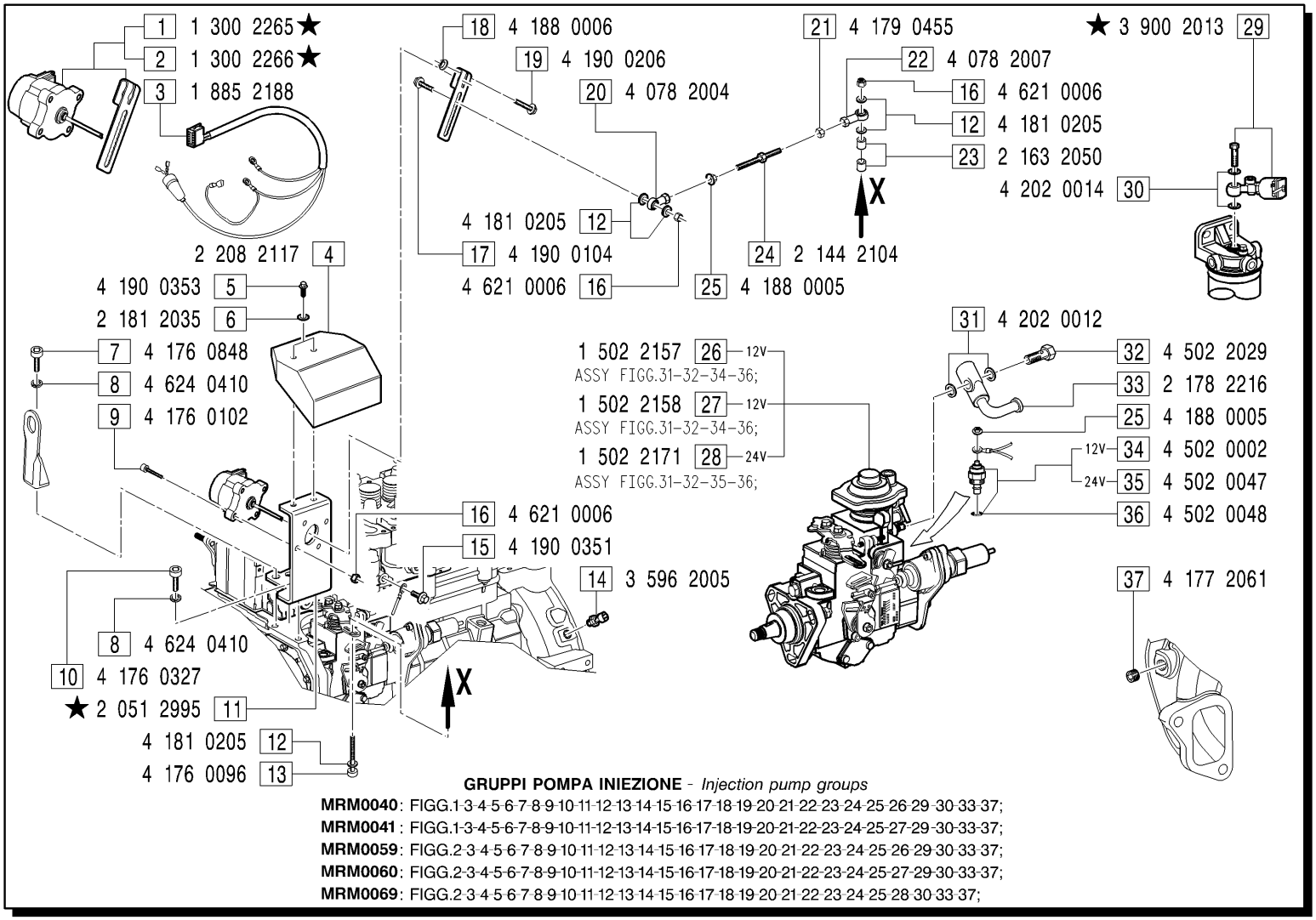

GRUPPI POMPA INIEZIONE - *Injection pump groups*

MRM0040: FIGG.1-3-4-5-6-7-8-9-10-11-12-13-14-15-16-17-18-19-20-21-22-23-24-25-26-29-30-33-37;
MRM0041: FIGG.1-3-4-5-6-7-8-9-10-11-12-13-14-15-16-17-18-19-20-21-22-23-24-25-27-29-30-33-37;
MRM0059: FIGG.2-3-4-5-6-7-8-9-10-11-12-13-14-15-16-17-18-19-20-21-22-23-24-25-26-29-30-33-37;
MRM0060: FIGG.2-3-4-5-6-7-8-9-10-11-12-13-14-15-16-17-18-19-20-21-22-23-24-25-27-29-30-33-37;
MRM0069: FIGG.2-3-4-5-6-7-8-9-10-11-12-13-14-15-16-17-18-19-20-21-22-23-24-25-28-30-33-37;

MODIFICATIONS-MODIFICHE-ÄNDERUNGEN-MODIFICACIÓN

Pos. N.	Code Codice	SIMBOLS SIMBOLI △	▲	⧄	EC	Up to serial nr. Fino a matricola
1	3 300 2134			X		
2	3 300 2134			X		
11	2 051 2921	X		X		
29	3 900 2009	X		X		

Pos. N.	DESCRIPTION DESCRIZIONE	Quantity (Q.tà) 703	704	706	
1	ELECT.GOVERNOR ASSY		1	1	
2	ELECT.GOVERNOR ASSY		1	1	
3	WIRNING		1	1	
4	HOUSING		1	1	
5	SCREW		2	2	
6	WASHER		2	2	
7	SCREW		1	1	
8	SPRING WASHER		3	3	
9	SCREW		4	4	
10	SCREW		2	2	
11	SUPPORT		1	1	
12	WASHER		5	5	
13	SCREW		1	1	
14	PICK-UP		1	1	
15	SCREW		1	1	
16	NUT		6	6	
17	SCREW		1	1	
18	NUT		1	1	
19	SCREW		1	1	
20	BALL JOINT		1	1	
21	NUT		1	1	
22	BALL JOINT		1	1	
23	SPACER		2	2	
24	TIE ROD		1	1	
25	NUT		2	2	
26	INJECTION PUMP 12V		1		
27	INJECTION PUMP 12V			1	
28	INJECTION PUMP 24V		1		
29	ELECTROVALVE ASSY		1	1	
30	GASKET		2	2	
31	GASKET		2	2	
32	UNION SCREW		1	1	
33	UNION		1	1	
34	ELECTROVALVE 12V		1	1	