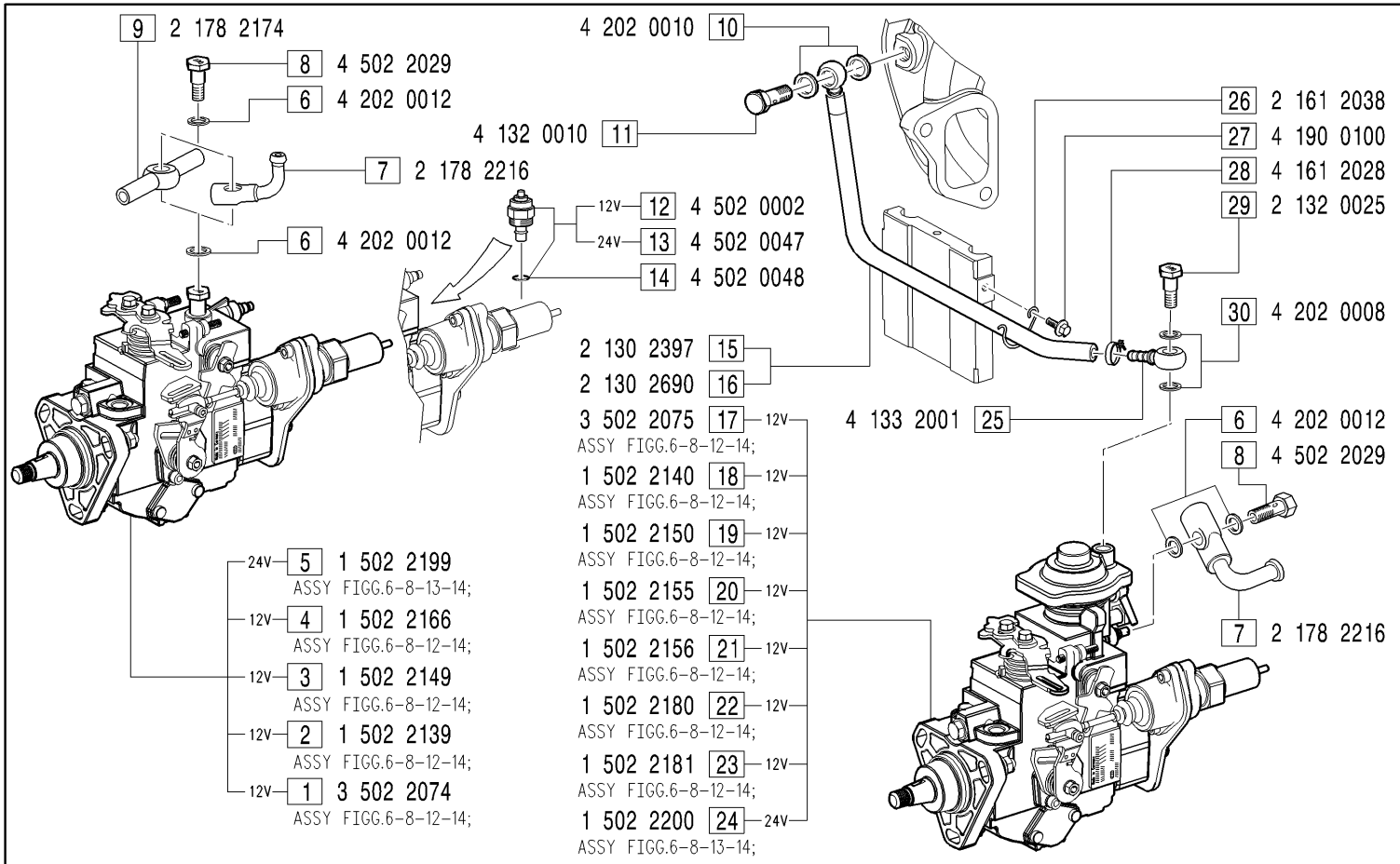

GRUPPI POMPA INIEZIONE - *Injection pump groups*

MRM0031: FIGG.3-7; **MRM0032**: FIGG.2-7; **MRM0033**: FIGG.1-7; **MRM0058**: FIGG.4-7; **MRM0072**: FIGG.2-9; **MRM0106**: FIGG.5-7; **MRM0107**: FIGG.5-9;
MRM0034: FIGG.7-10-11-15-19-25-26-27-28-29-30; **MRM0035**: FIGG.7-10-11-15-17-25-26-27-28-29-30; **MRM0036**: FIGG.7-10-11-15-18-25-26-27-28-29-30;
MRM0053: FIGG.7-10-11-15-20-25-26-27-28-29-30; **MRM0055**: FIGG.9-10-11-15-21-25-26-27-28-29-30; **MRM0062**: FIGG.7-10-11-16-17-25-26-27-28-29-30;
MRM0091: FIGG.7-10-11-15-22-25-26-27-28-29-30; **MRM0092**: FIGG.7-10-11-15-23-25-26-27-28-29-30; **MRM0108**: FIGG.7-10-11-15-24-25-26-27-28-29-30;

MODIFICATIONS-MODIFICHE-ÄNDERUNGEN-MODIFICACIÓN

Pos. N.	Code Codice	SIMBOLS SIMBOLI △	▲	⧄	EC	Up to serial nr. Fino a matricola

Pos. N.	DESCRIPTION DESCRIZIONE	Quantity (Q.tà) 703	704	706	
1	INJECTION PUMP 12V		1		
2	INJECTION PUMP 12V		1		
3	INJECTION PUMP 12V		1		
4	INJECTION PUMP 12V		1		
5	INJECTION PUMP 24V		1		
6	GASKET		2		
7	UNION		1		
8	UNION SCREW		1		
9	UNION		1		
10	GASKET		2		
11	UNION SCREW		1		
12	ELECTROVALVE 12V		1		
13	ELECTROVALVE 24V		1		
14	O RING		1		
15	PIPE		1		
16	PIPE		1		
17	INJECTION PUMP 12V		1		
18	INJECTION PUMP 12V		1		
19	INJECTION PUMP 12V		1		
20	INJECTION PUMP 12V		1		
21	INJECTION PUMP 12V		1		
22	INJECTION PUMP 12V		1		
23	INJECTION PUMP 12V		1		
24	INJECTION PUMP 24V		1		
25	SHEAT		1		
26	CLAMP		1		
27	SCREW		1		
28	CLAMP		1		
29	UNION SCREW		1		
30	GASKET		2		