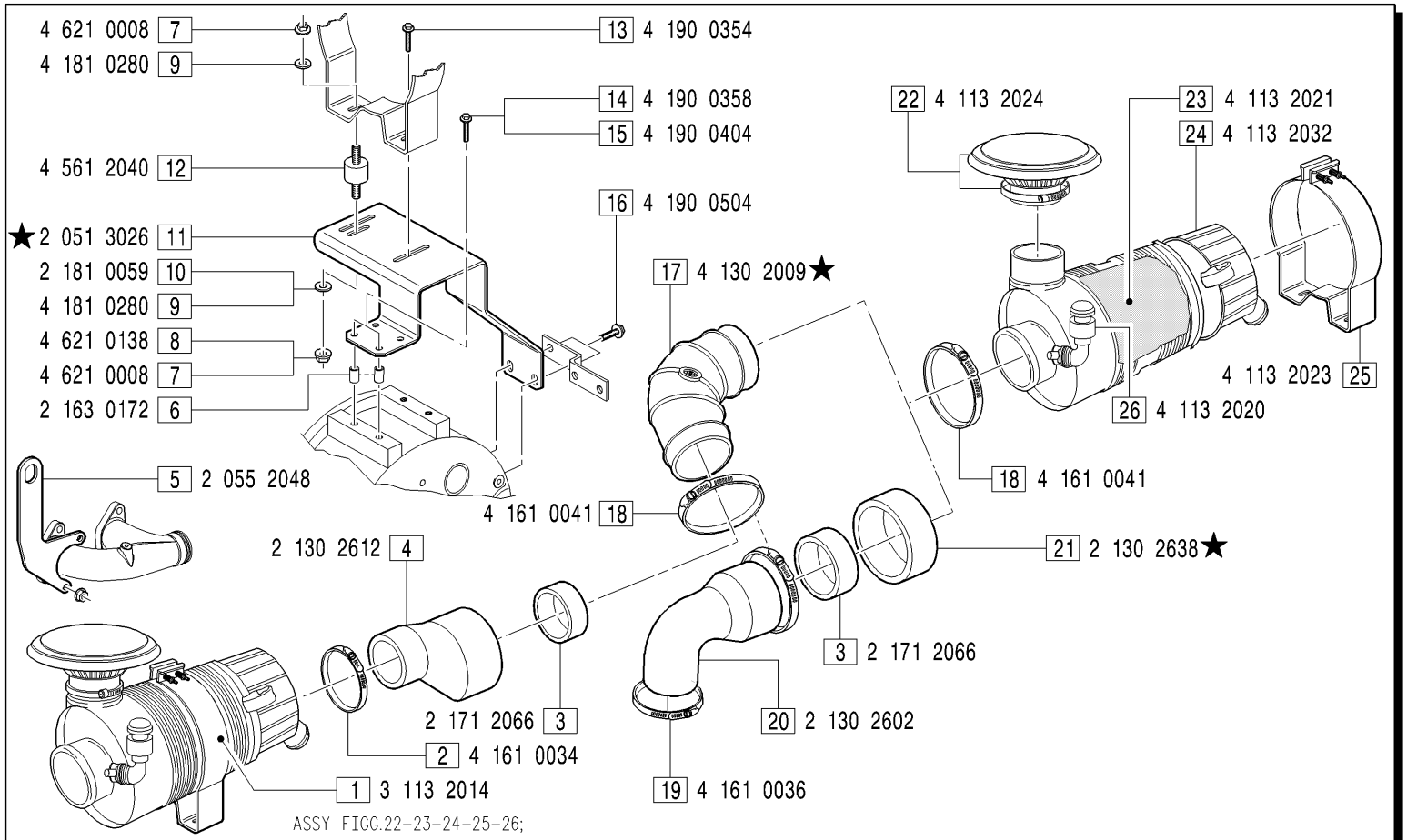


**GRUPPI FILTRI ARIA** - *Air filter groups*

**FAR0039**: FIGG.1-3-6-8-10-11-13-15-16-18-19-20-21-27-28-29-30-31-32-33-34-35-36-37-38;

**FAR0045**: FIGG.1-2-3-4-5-6-7-9-11-12-14-16-17-18;

MODIFICATIONS-MODIFICHE-ÄNDERUNGEN-MODIFICACIÓN

| Pos. N. | Code Codice | SIMBOLS SIMBOLI △ | ▲ | ⧄ | EC | Up to serial nr. Fino a matricola |
|---|---|---|---|---|---|---|
| 11 | 2 051 2892 | X | | X | | |
| 17 | 4 130 2007 (FAR0037) | X | | X | | |
| 21 | 2 130 2601 | X | | X | | |

| Pos. N. | DESCRIPTION DESCRIZIONE | Quantity (Q.tà) 703 | 704 | 706 | | Pos. N. | DESCRIPTION DESCRIZIONE | | | | | Pos. N. | DESCRIPTION DESCRIZIONE | | | | | Pos. N. | DESCRIPTION DESCRIZIONE | | | | |
|---|---|---|---|---|---|---|---|---|---|---|---|---|---|---|---|---|---|---|---|---|---|---|---|
| 1 | AIR CLEANER ASSY | | 1 | 1 | | 8 | NUT | | | 2 | | 17 | SHEAT | | 1 | | | 26 | CLOGGING GAUGE | | 1 | 1 | |
| 2 | CLAMP | | 1 | | | 9 | WASHER | | 4 | | | 18 | CLAMP | | 2 | 2 | | 27 | PLUG | | | 1 | |
| 3 | SHEAT | | 1 | | | 10 | WASHER | | | 2 | | 19 | CLAMP | | | 3 | | 28 | CLAMP | | | 2 | |
| 4 | SHEAT | | 1 | | | 11 | AIR FILTER SUPPORT | | 1 | 1 | | 20 | SHEAT | | | 1 | | 29 | PIPE | | | 1 | |
| 5 | LIFTING EYE | | 1 | | | 12 | VIBRATION DAMPER | | 2 | | | 21 | SHEAT | | | 1 | | 30 | BRACKET | | | 1 | |
| 6 | SPACER | | 2 | 2 | | 13 | SCREW | | | 2 | | 22 | CAP | | 1 | 1 | | 31 | NUT | | | 2 | |
| 7 | NUT | | 4 | | | 14 | SCREW | | 2 | | | 23 | FILTER ELEMENT | | 1 | 1 | | 32 | CLAMP | | | 3 | |
| | | | | | | 15 | SCREW | | | 4 | | 24 | FILTER CAP ASSY | | 1 | 1 | | 33 | PIPE | | | 1 | |
| | | | | | | 16 | SCREW | | 2 | 2 | | 25 | CLAMP | | 1 | 1 | | 34 | SHEAT | | | 1 | |