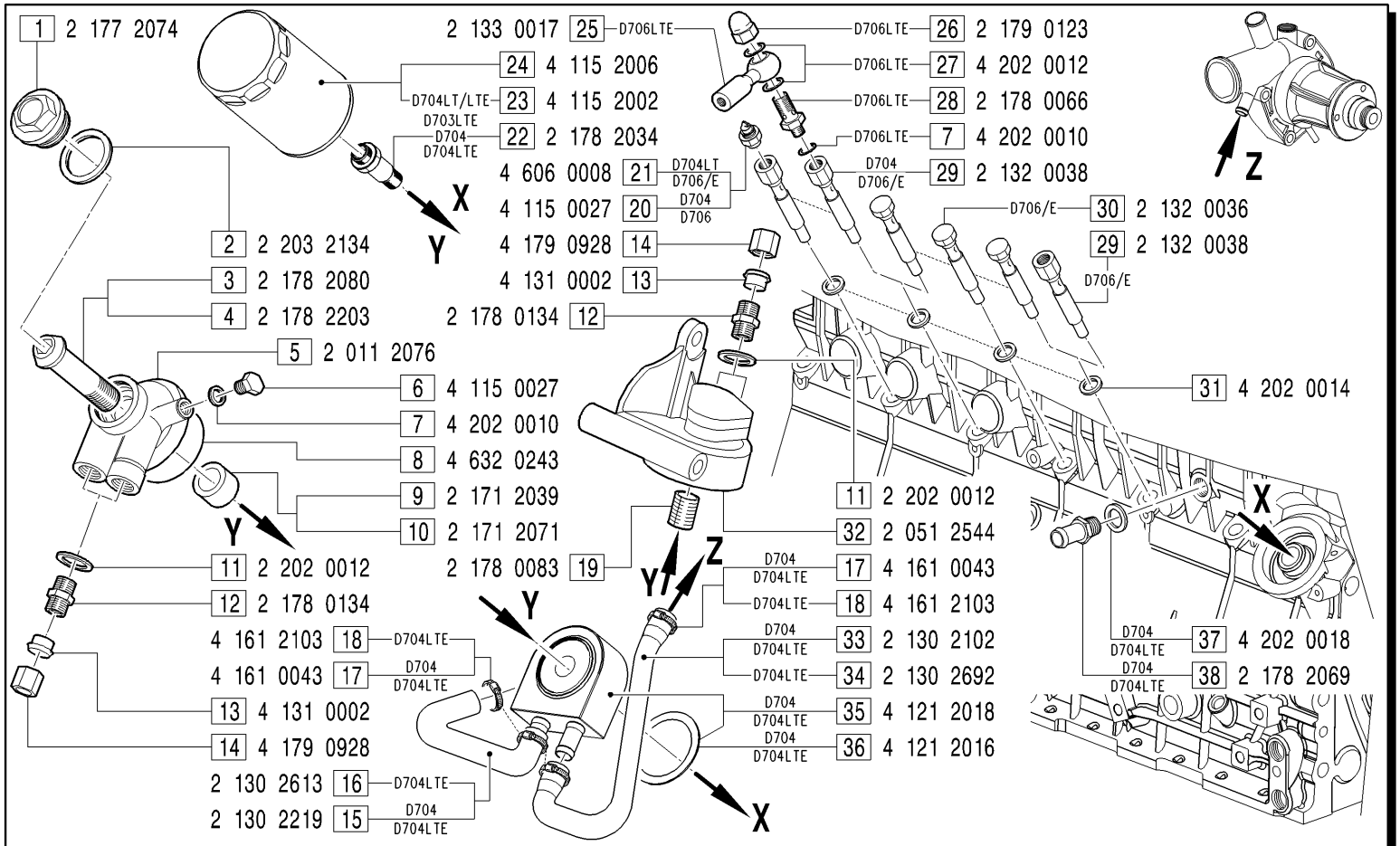

GRUPPI FILTRO OLIO A DISTANZA, SCAMBIATORE E APPL.MANOCONTATTO - *Remote oil filter, oil cooler and pressure trasmitter application groups*

CFO0001: FIGG.22-24; **CFO0002**: FIGG.22-23;
SCO0003: FIGG.15-17-33-35-37-38; **SCO0004**: FIGG.16-18-34-35-37-38;
FOL0001: FIGG.1-2-3-5-6-7-8-9-11-12-13-14-19-24-32; **FOL0002** : FIGG.1-2-4-5-6-7-8-10-11-12-13-14-19-32;
CCO0010: FIGG.21-29-30-31; **CCO0011**: FIGG.7-21-25-26-27-28-29-30-31; **CCO0012**: FIGG.20-29-30-31; **CCO0013**: FIGG.20-29-31; **CCO0014**: FIGG.21-29-31;

MODIFICATIONS-MODIFICHE-ÄNDERUNGEN-MODIFICACIÓN

Pos. N.	Code Codice	SIMBOLS SIMBOLI △	▲	◪	EC	Up to serial nr. Fino a matricola

Pos. N.	DESCRIPTION DESCRIZIONE	Quantity (Q.tà) 703	704	706	
33	PIPE		1		
34	PIPE		1		
35	OIL COOLER ASSY		1		
36	GASKET		1		
37	GASKET		1		
38	UNION		1		