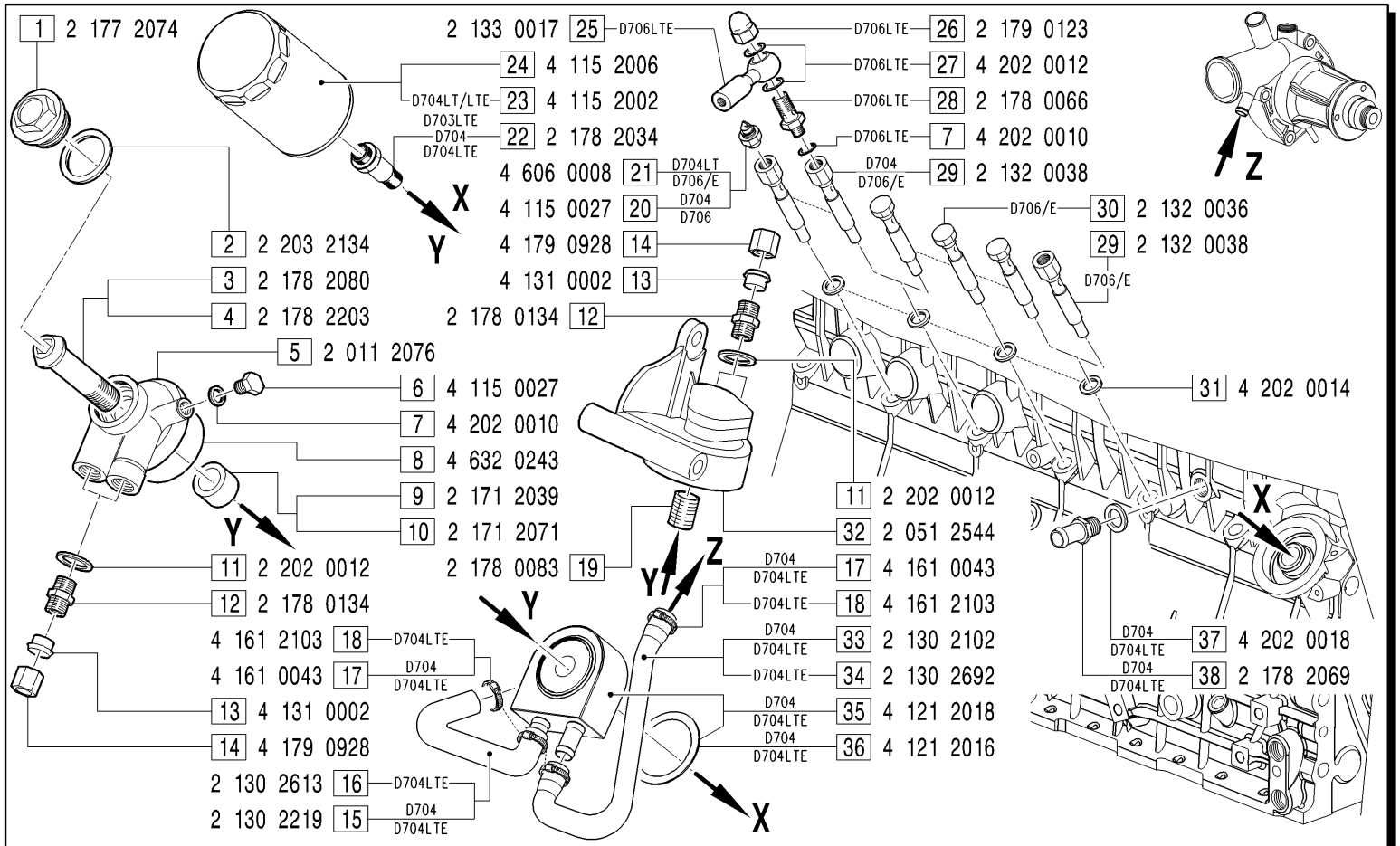

GRUPPI FILTRO OLIO A DISTANZA, SCAMBIATORE E APPL.MANOCONTATTO - *Remote oil filter, oil cooler and pressure trasmitter application groups*

CFO0001: FIGG.22-24; **CFO0002**: FIGG.22-23;
SCO0003: FIGG.15-17-33-35-37-38; **SCO0004**: FIGG.16-18-34-35-37-38;
FOL0001: FIGG.1-2-3-5-6-7-8-9-11-12-13-14-19-24-32; **FOL0002** : FIGG.1-2-4-5-6-7-8-10-11-12-13-14-19-32;
CCO0010: FIGG.21-29-30-31; **CCO0011**: FIGG.7-21-25-26-27-28-29-30-31; **CCO0012**: FIGG.20-29-30-31; **CCO0013**: FIGG.20-29-31; **CCO0014**: FIGG.21-29-31;

MODIFICATIONS MODIFICHE ÄNDERUNGEN MODIFICACIÓN						
Pos. N.	Code Codice	SIMBOLS SIMBOLI △	▲	⧄	EC	Up to serial nr. Fino a matricola

Pos. N.	DESCRIPTION DESCRIZIONE	Quantity (Q.tà) 703	704	706		Pos. N.	DESCRIPTION DESCRIZIONE	703	704	706		Pos. N.	DESCRIPTION DESCRIZIONE	703	704	706		Pos. N.	DESCRIPTION DESCRIZIONE	703	704	706	
1	PLUG		1	1		8	O RING		1	1		17	CLAMP		4			26	NUT			1	
2	GASKET		1	1		9	SPACER		1			18	CLAMP		4			27	GASKET			2	
3	UNION		1			10	SPACER			1		19	UNION		1	1		28	UNION			1	
4	UNION			1		11	GASKET		4	4		20	PLUG		1	1		29	ADAPTOR BOLT(CCO10-12-13-14)		1	1	
5	CASING		1	1		12	UNION		4	4		21	OIL PRESSURE TRASMITTER		1	1		30	ADAPTOR BOLT (CCO0011)			3	
6	PLUG		1	1		13	OGIVE		4	4		22	UNION	1	1			30	ADAPTOR BOLT (CCO0011)			1	
7	GASKET		1	1		14	NUT		4	4		23	OIL FILTER		1			30	ADAPTOR BOLT(CCO0010-12)			3	
						15	PIPE		1			24	OIL FILTER	1	1	1		31	GASKET		1	4	
						16	PIPE		1			25	SHEAT			1		32	SUPPORT		1	1	