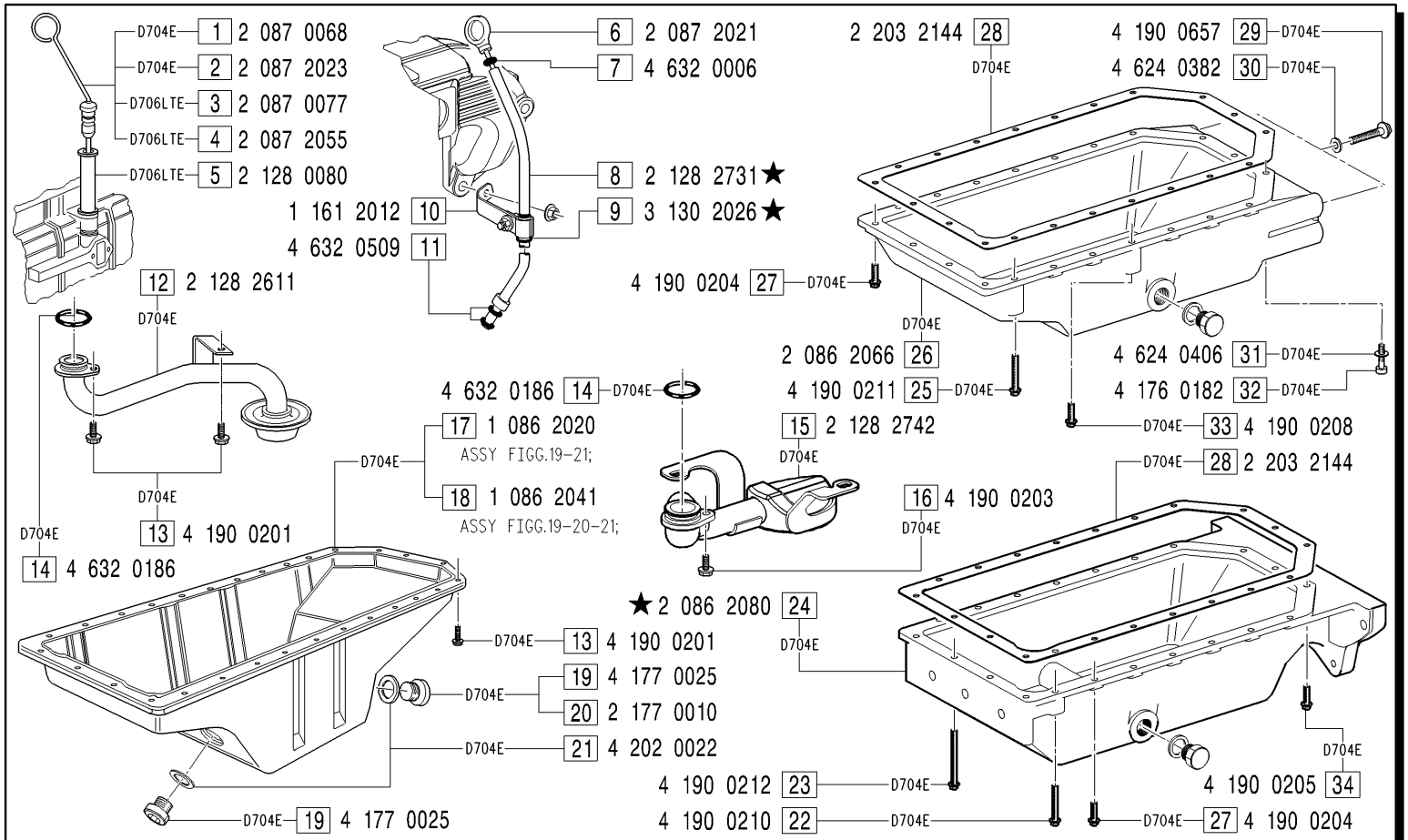

GRUPPI COPPA OLIO E ASTA LIVELLO OLIO - *Oil sump and dipstick groups*

ALO0001: FIG.1; **ALO0002**: FIGG.6-7-8-9-10-11; **ALO0003**: FIG.2; **ALO0004**: FIGG.3-5; **ALO0010**: FIG.4;
COL0005: FIGG.12-13-14-17; **COL0006**: FIGG.12-13-14-19-21-25-26-27-28-29-30-31-32-33;
COL0015: FIGG.12-13-14-19-21-22-23-24-27-28-34; **COL0019**: FIGG.12-13-14-18; **COL0026**: FIGG.13-14-15-16-18;

MODIFICATIONS-MODIFICHE-ÄNDERUNGEN-MODIFICACIÓN

Pos. N.	Code Codice	SIMBOLS SIMBOLI △	▲	⧄	EC	Up to serial nr. Fino a matricola
8	2 128 2414	X		X		
9	3 130 0701	X		X		
24	2 086 2073	X		X		77B - 04589

Pos. N.	DESCRIPTION DESCRIZIONE	Quantity (Q.tà) 703	704	706	
1	DIPSTICK		1		
2	DIPSTICK		1	1	
3	DIPSTICK			1	
4	DIPSTICK			1	
5	PIPE			1	
6	DIPSTICK		1	1	
7	O RING		1	1	
8	PIPE		1	1	
9	GASKET		1	1	
10	CLAMP ASSY		1	1	
11	O RING		2	2	
12	OIL DIPPER		1		
13	SCREW (COL0005-COL0019)		23		
13	SCREW (COL0006-COL0015)		2		
13	SCREW (COL0026)		21		
14	O RING		1		
15	OIL DIPPER		1		
16	SCREW		1		
17	OIL SUMP ASSY		1		
18	OIL SUMP ASSY		1		
19	PLUG (COL0005-COL0006)		2		
19	PLUG (COL0015-19-26)		1		
20	PLUG		1		
21	GASKET		2		
22	SCREW		1		
23	SCREW		4		
24	OIL SUMP		1		
25	SCREW		5		
26	OIL SUMP		1		
27	SCREW (COL0006)		11		
27	SCREW (COL0015)		13		
28	GASKET		1		
29	SCREW		2		
30	WASHER		2		