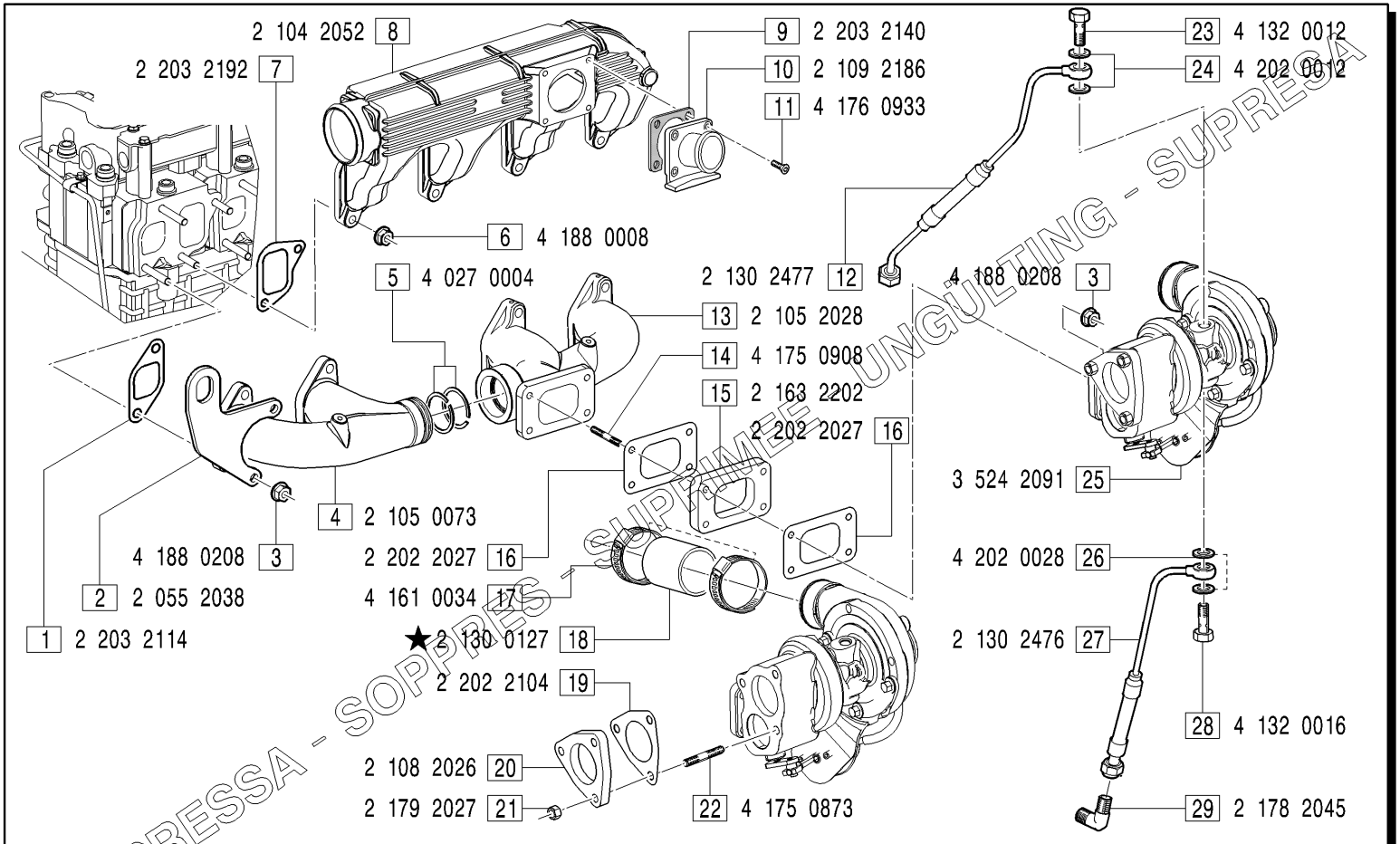

GRUPPI APPLICAZIONE TURBOCOMPRESSORE - *Turbocharger application groups*

PTU0011 : FIGG.1-2-3-4-5-6-7-8-9-10-11-12-13-14-15-16-17-18-19-20-21-22-23-24-25-26-27-28-29;

MODIFICATIONS-MODIFICHE-ÄNDERUNGEN-MODIFICACIÓN						
Pos. N.	Code Codice	SIMBOLS SIMBOLI △	▲	◪	EC	Up to serial nr. Fino a matricola
18	2 130 2155	X		X		

Pos. N.	DESCRIPTION DESCRIZIONE	Quantity (Q.tà) 703	704	706	
1	GASKET		4		
2	LIFTING EYE		1		
3	NUT		12		
4	EXHAUST MANIFOLD		1		
5	LOCKWASHER		2		
6	NUT		8		
7	GASKET		1		
8	INTAKE MANIFOLD		1		
9	GASKET		1		
10	SHEAT		1		
11	SCREW		4		
12	OIL DELIVERY PIPE		1		
13	EXHAUST MANIFOLD		1		
14	STUD		4		
15	SPACER		1		
16	GASKET		2		
17	CLAMP		2		
18	SHEAT		1		
19	GASKET		1		
20	FLANGE		1		
21	NUT		3		
22	STUD		3		
23	UNION SCREW		1		
24	GASKET		2		
25	TURBOCHARGER		1		
26	GASKET		2		
27	OIL RETURN PIPE		1		
28	UNION SCREW		1		
29	UNION		1		