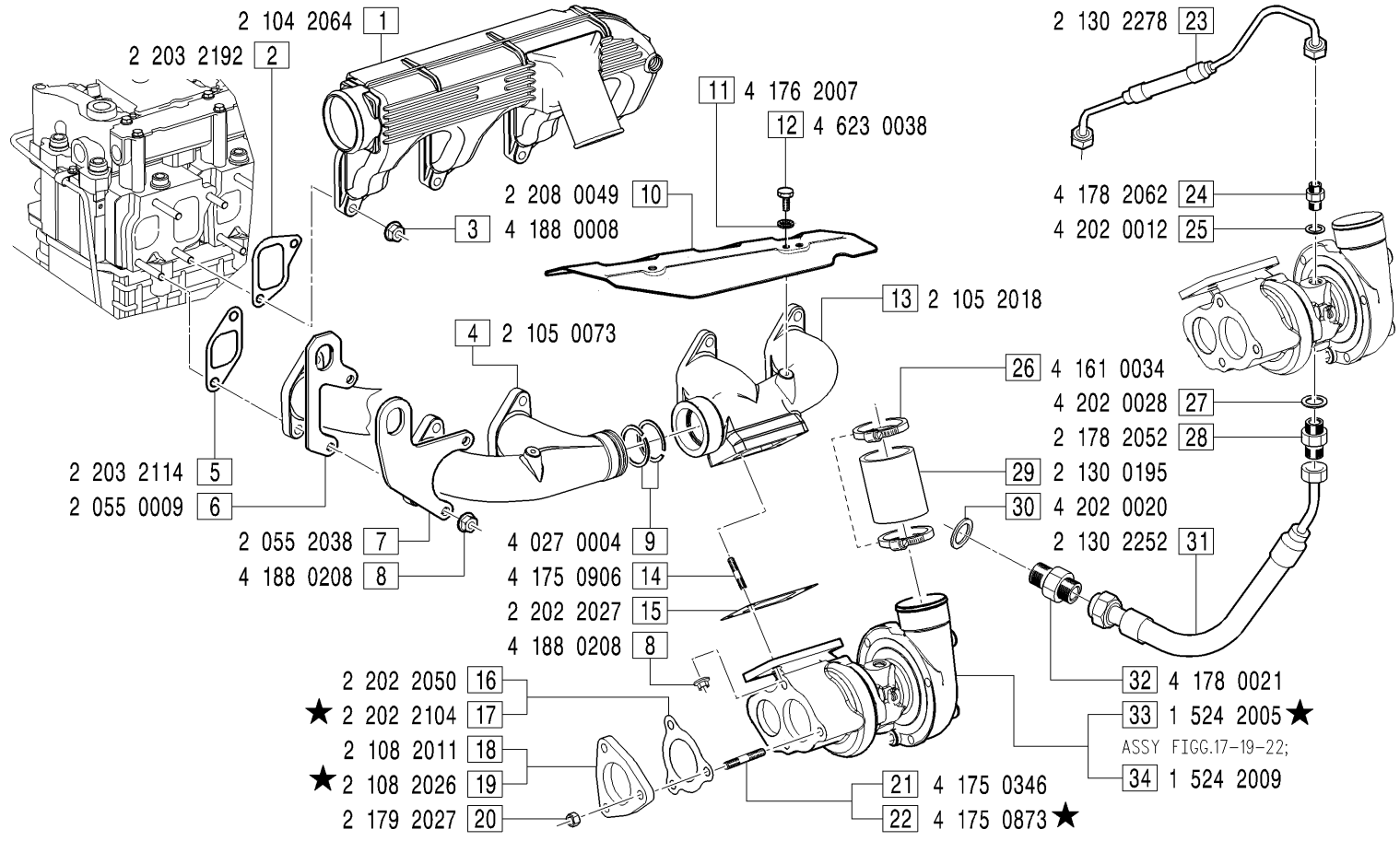

GRUPPI APPLICAZIONE TURBOCOMPRESSORE - *Turbocharger application groups*

PTU0006: FIGG.1-2-3-4-5-7-8-9-10-11-12-13-14-15-20-23-24-25-26-27-28-29-30-31-32-33;

PTU0017: FIGG.1-2-3-4-5-6-8-9-10-11-12-13-14-15-20-23-24-25-26-27-28-29-30-31-32-33;

PTU0028: FIGG.1-2-3-4-5-6-8-9-13-14-15-16-18-20-21-23-24-25-26-27-28-29-30-31-32-34;

MODIFICATIONS MODIFICHE ÄNDERUNGEN MODIFICACIÓN

Pos. N.	Code Codice	SIMBOLS SIMBOLI △	▲	⧄	EC	Up to serial nr. Fino a matricola
17	2 202 2050		X			77B - 02454
19	2 108 2011		X			
22	4 175 0346		X			
33	3 524 2031	X		X		

Pos. N.	DESCRIPTION DESCRIZIONE	Quantity (Q.tà) 703	704	706		Pos. N.	DESCRIPTION DESCRIZIONE	Quantity (Q.tà) 703	704	706		Pos. N.	DESCRIPTION DESCRIZIONE	Quantity (Q.tà) 703	704	706		Pos. N.	DESCRIPTION DESCRIZIONE	Quantity (Q.tà) 703	704	706	
1	INTAKE MANIFOLD		1			8	NUT		12			17	GASKET		1			26	CLAMP		2		
2	GASKET		4			9	LOCKWASHER		2			18	FLANGE		1			27	GASKET		1		
3	NUT		8			10	HEAT SHIELD		1			19	FLANGE		1			28	UNION		1		
4	EXHAUST MANIFOLD		1			11	WASHER		2			20	NUT		3			29	SHEAT		1		
5	GASKET		4			12	SCREW		2			21	STUD		3			30	GASKET		1		
6	LIFTING EYE		1			13	EXHAUST MANIFOLD		1			22	STUD		3			31	OIL RETURN PIPE		1		
7	LIFTING EYE		1			14	STUD		4			23	OIL DELIVERY PIPE		1			32	UNION		1		
						15	GASKET		1			24	UNION		1			33	TURBOCHARGER ASSY		1		
						16	GASKET		1			25	GASKET		1			34	TURBOCHARGER ASSY		1		