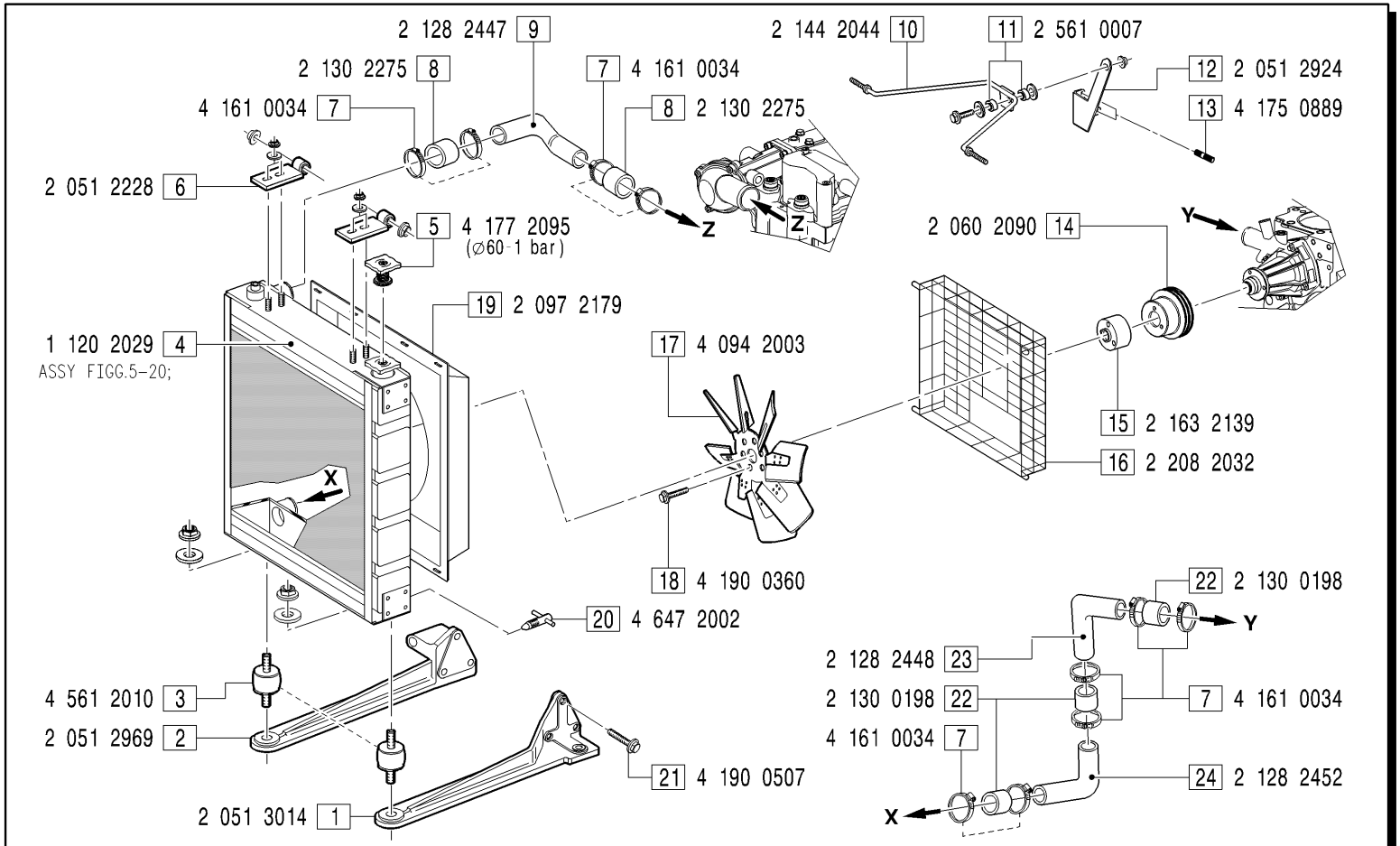

GRUPPI RADIATORE - *Radiator groups*

RAD0047: FIGG.1-2-3-4-6-7-8-9-10-11-12-13-14-15-16-17-18-19-21-22-23-24;

MODIFICATIONS-MODIFICHE-ÄNDERUNGEN-MODIFICACIÓN						
Pos. N.	Code Codice	SIMBOLS SIMBOLI △	▲	⧄	EC	Up to serial nr. Fino a matricola

Pos. N.	DESCRIPTION DESCRIZIONE	Quantity (Q.tà) 703	704	706	
1	BRACKET		1		
2	BRACKET		1		
3	VIBRATION DAMPER		2		
4	RADIATOR ASSY		1		
5	BREATHER CAP		1		
6	BRACKET		2		
7	CLAMP		10		
8	SHEAT		2		
9	PIPE		1		
10	BRACKET		1		
11	VIBRATION CAMPER		2		
12	BRACKET		1		
13	STUD		2		
14	WATER PUMP PULLEY		1		
15	SPACER		1		
16	FAN GUARD		1		
17	SUCTION FAN		1		
18	SCREW		3		
19	AIR SHROUD		1		
20	SHUT OF VALVE		1		
21	SCREW		5		
22	SHEAT		3		
23	PIPE		1		
24	PIPE		1		