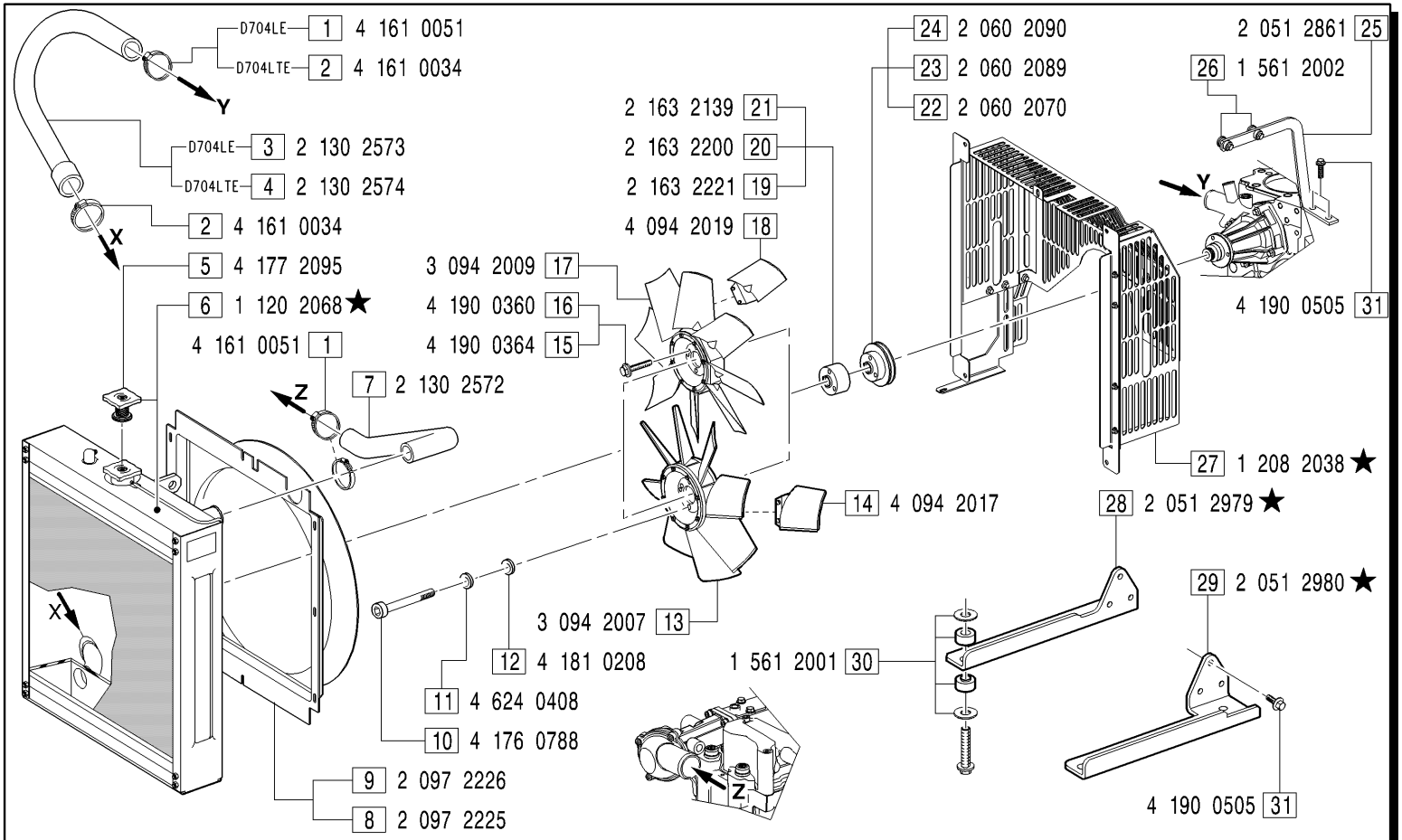

GRUPPI RADIATORE - *Radiator groups*

RAD0034: FIGG.1-2-3-6-7-8-10-11-12-13-20-22-25-26-27-28-29-30-31;
RAD0035: FIGG.1-2-3-6-7-9-15-17-19-22-25-26-27-28-29-30-31;
RAD0036: FIGG.1-2-4-6-7-8-13-16-21-23-25-26-27-28-29-30-31;
RAD0037: FIGG.1-2-4-6-7-9-10-11-12-17-20-23-25-26-27-28-29-30-31;
RAD0042: FIGG.1-2-4-6-7-9-10-11-12-17-20-24-25-26-27-28-29-30-31;
RAD0049: FIGG.1-2-4-6-7-8-13-16-21-24-25-26-27-28-29-30-31;

MODIFICATIONS-MODIFICHE-ÄNDERUNGEN-MODIFICACIÓN

Pos. N.	Code Codice	SIMBOLS SIMBOLI △	▲	⧄	EC	Up to serial nr. Fino a matricola
6	1 120 2067	X		X		
27	1 208 2033	X		X		
28	2 051 2858	X		X		
29	2 051 2859	X		X		

Pos. N.	DESCRIPTION DESCRIZIONE	Quantity (Q.tà) 703	704	706	
1	CLAMP (D704LE)		3		
1	CLAMP (D704LTE)		2		
2	CLAMP (D704LE)		1		
2	CLAMP (D704LTE)		2		
3	PIPE		1		
4	PIPE		1		
5	BREATHER CAP		1		
6	RADIATOR ASSY		1		
7	PIPE		1		
8	AIR SHROUD		1		
9	AIR SHROUD		1		
10	SCREW		3		
11	WASHER		3		
12	WASHER		3		
13	SUCTION FAN ASSY		1		
14	FAN BLADE		8		
15	SCREW		3		
16	SCREW		3		
17	BLOWER FAN ASSY		1		
18	FAN BLADE		8		
19	SPACER		1		
20	SPACER		1		
21	SPACER		1		
22	WATER PUMP PULLEY		1		
23	WATER PUMP PULLEY		1		
24	WATER PUMP PULLEY		1		
25	BRACKET		1		
26	VIBRATION DAMPER ASSY		2		
27	FAN GUARD ASSY		1		
28	BRACKET		1		
29	BRACKET		1		
30	VIBRATION DAMPER ASSY		2		
31	SCREW		8		