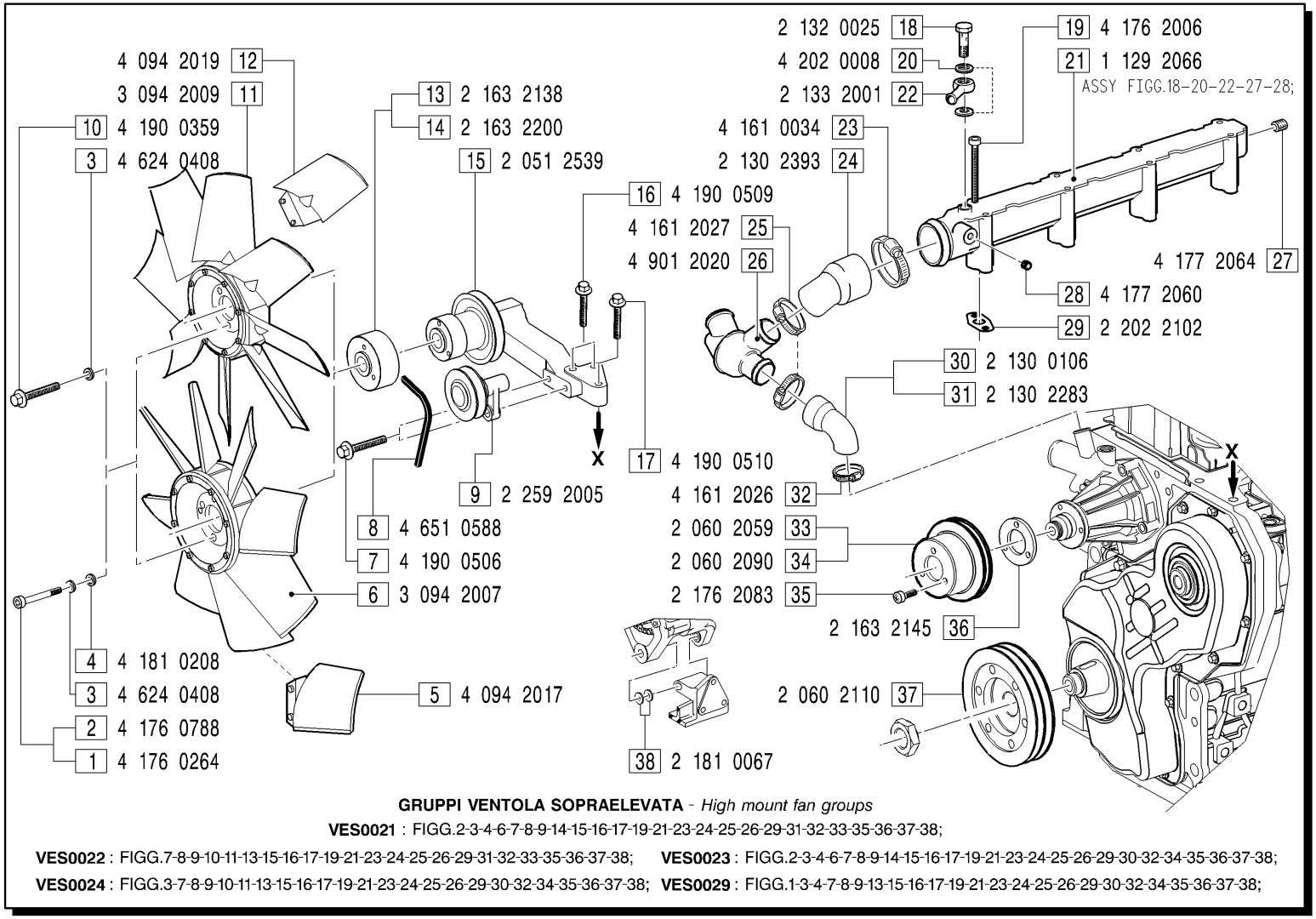

GRUPPI VENTOLA SOPRAELEVATA - *High mount fan groups*

VES0021 : FIGG.2-3-4-6-7-8-9-14-15-16-17-19-21-23-24-25-26-29-31-32-33-35-36-37-38;

VES0022 : FIGG.7-8-9-10-11-13-15-16-17-19-21-23-24-25-26-29-31-32-33-35-36-37-38; **VES0023** : FIGG.2-3-4-6-7-8-9-14-15-16-17-19-21-23-24-25-26-29-30-32-34-35-36-37-38;

VES0024 : FIGG.3-7-8-9-10-11-13-15-16-17-19-21-23-24-25-26-29-30-32-34-35-36-37-38; **VES0029** : FIGG.1-3-4-7-8-9-13-15-16-17-19-21-23-24-25-26-29-30-32-34-35-36-37-38;

MODIFICATIONS-MODIFICHE-ÄNDERUNGEN-MODIFICACIÓN

Pos. N.	Code Codice	SIMBOLS SIMBOLI △	▲	∅	EC	Up to serial nr. Fino a matricola

Pos. N.	DESCRIPTION DESCRIZIONE	Quantity (Q.tà) 703	704	706	
1	SCREW		3		
2	SCREW		3		
3	WASHER		3		
4	WASHER		3		
5	FAN BLADE		8		
6	SUCTION FAN ASSY		1		
7	SCREW		2		
8	BELT		1		
9	BELT TENSIONER PULLEY		1		
10	SCREW		3		
11	BLOWER FAN ASSY		1		
12	FAN BLADE		8		
13	SPACER		1		
14	SPACER		1		
15	SUPPORT FAN		1		
16	SCREW		2		
17	SCREW		1		
18	UNION SCREW		1		
19	SCREW		8		
20	GASKET		2		
21	WATER MANIFOLD ASSY		1		
22	SHEAT		1		
23	CLAMP		1		
24	PIPE		1		
25	CLAMP		2		
26	THERMOSTATIC VALVE		1		
27	PLUG		1		
28	PLUG		1		
29	GASKET		4		
30	PIPE		1		
31	PIPE		1		
32	CLAMP		1		
33	WATER PUMP PULLEY		1		
34	WATER PUMP PULLEY		1		