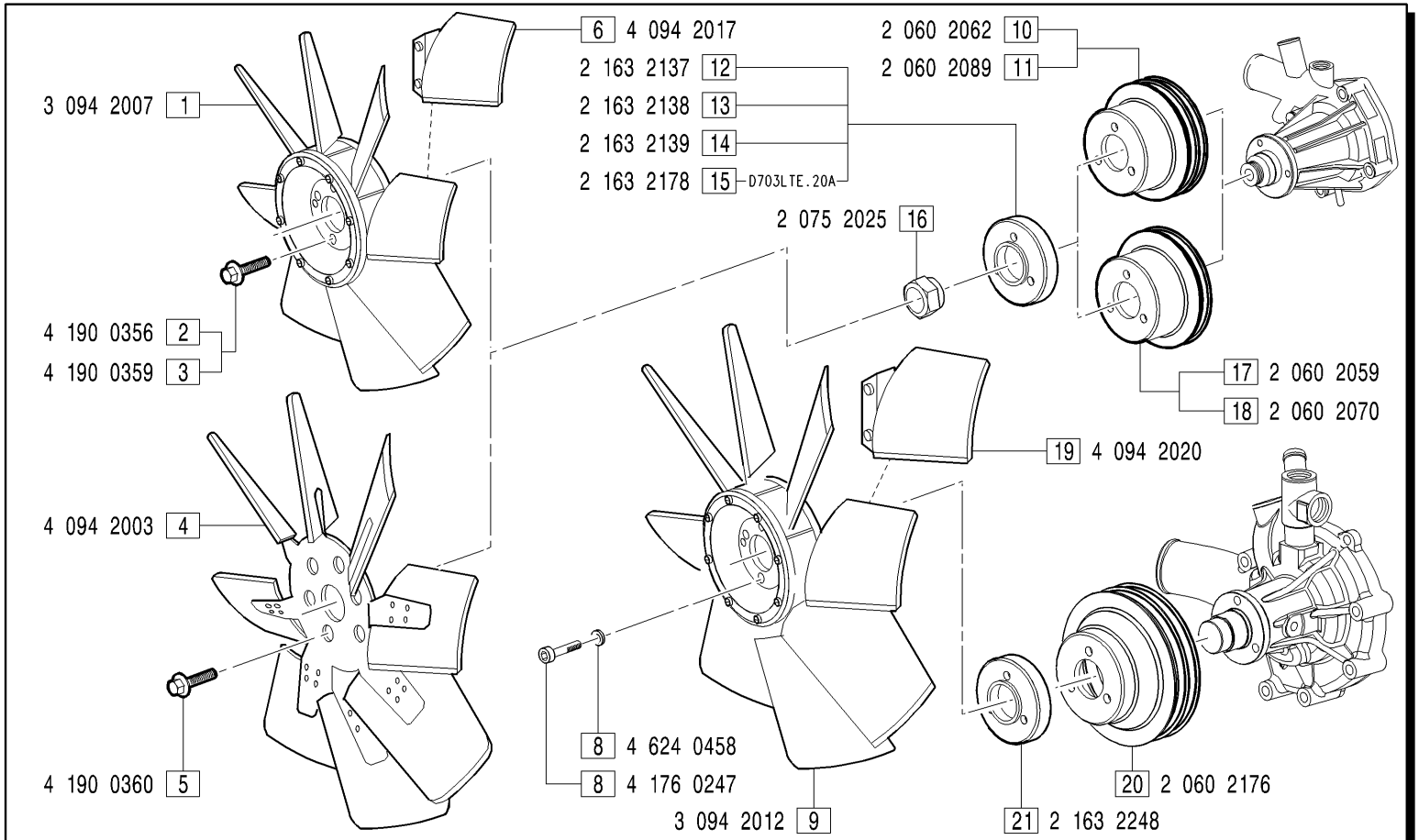

GRUPPI VENTOLA ASPIRANTE - *Suction fan groups*

VER0023 : FIGG.1-3-13-18;
VER0025 : FIGG.1-2-11-12-16;
VER0027 : FIGG.4-6-11-14;
VER0029 : FIGG.1-3-13-17;
VER0032 : FIGG.1-3-10-13;
VER0033 : FIGG.7-8-9-20-21;

MODIFICATIONS-MODIFICHE-ÄNDERUNGEN-MODIFICACIÓN						
Pos. N.	Code Codice	SIMBOLS SIMBOLI △	▲	⧄	EC	Up to serial nr. Fino a matricola

Pos. N.	DESCRIPTION DESCRIZIONE	Quantity (Q.tà) 703	704	706	
1	FAN ASSY	1	1		
2	SCREW	3	3		
3	SCREW	3	3		
4	FAN		1	1	
5	SCREW		3	3	
6	FAN BLADE	8	8		
7	WASHER		3		
8	SCREW		3		
9	FAN ASSY		1		
10	WATER PUMP PULLEY		1		
11	WATER PUMP PULLEY		1	1	
12	SPACER		1		
13	SPACER	1	1		
14	SPACER		1	1	
15	SPACER	1			
16	FAN PILOT HUB		1		
17	WATER PUMP PULLEY	1	1		
18	WATER PUMP PULLEY	1	1		
19	FAN BLADE		8		
20	WATER PUMP PULLEY		1		
21	SPACER		1		