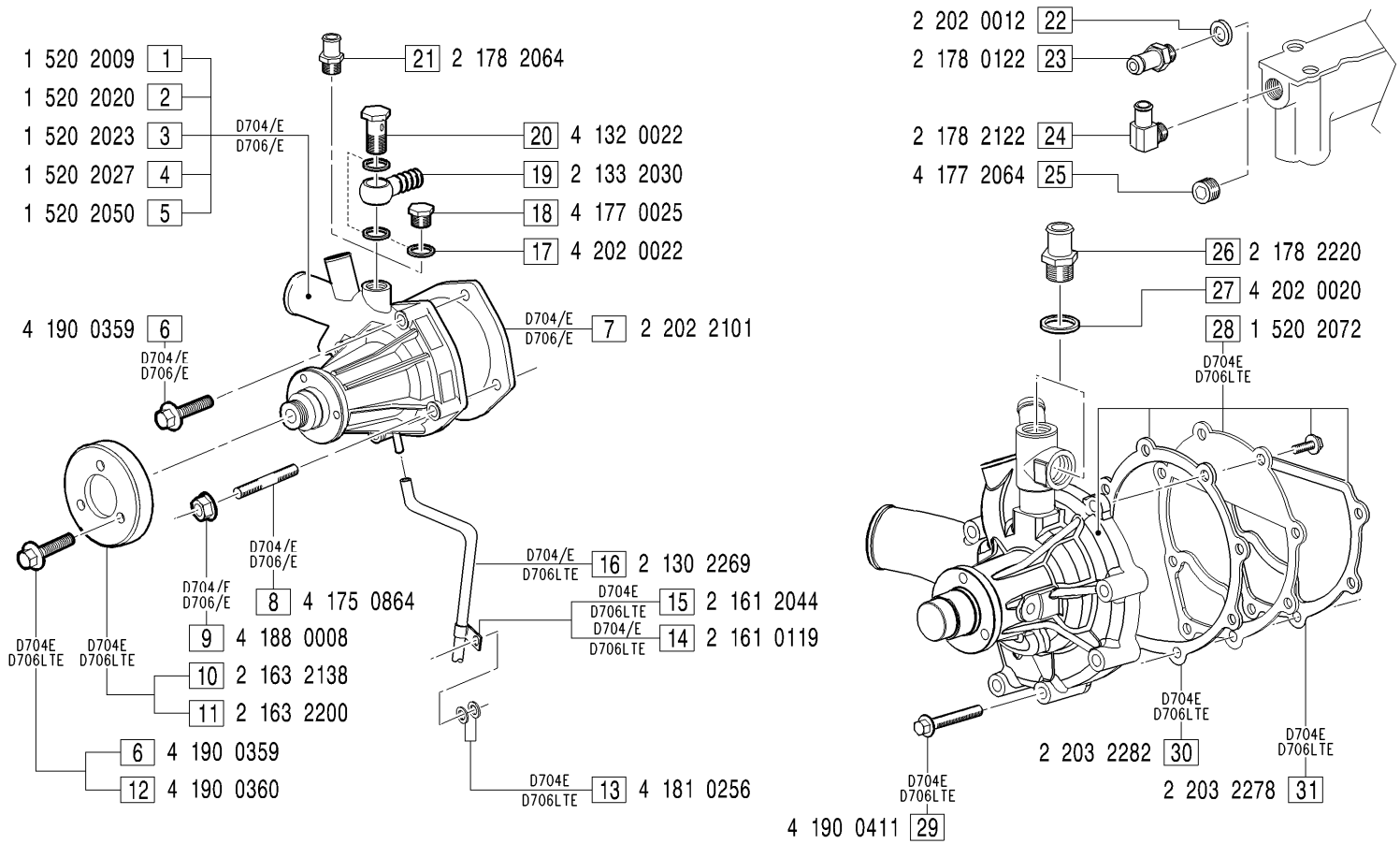

GRUPPI POMPA ACQUA E RISCALDAMENTO IN CABINA - *Water pump and cab heater kit groups*

MPA0001: FIGG.4-6-7-8-9; **MPA0002**: FIGG.1-6-7-8-9-11-12-15-16-17-18; **MPA0003**: FIGG.5-6-7-8-9; **MPA0004**: FIGG.1-6-7-8-9-10-13-14-16;
MPA0005: FIGG.27-28-29; **MPA0006**: FIGG.3-6-7-8-9-14-16; **MPA0007**: FIGG.2-6-7-8-9-14-16; **MPA0010**: FIGG.4-6-7-8-9-14-16;
ARC0001: FIGG.21-22-23; **ARC0002**: FIGG.17-19-20-24; **ARC0003**: FIGG.17-18-25; **ARC0012**: FIGG.22-23; **ARC0013**: FIGG.22-23-26-27;

MODIFICATIONS-MODIFICHE-ÄNDERUNGEN-MODIFICACIÓN						
Pos. N.	Code Codice	SIMBOLS SIMBOLI △	▲	⧄	EC	Up to serial nr. Fino a matricola

Pos. N.	DESCRIPTION DESCRIZIONE	Quantity (Q.tà) 703	704	706	
1	WATER PUMP		1		
2	WATER PUMP		1		
3	WATER PUMP		1		
4	WATER PUMP		1	1	
5	WATER PUMP			1	
6	SCREW (MPA0001-02-03-06-07)		2	2	
6	SCREW (MPA0004)		5		
7	GASKET		1	1	
8	STUD		2	2	
9	NUT		2	2	
10	SPACER		1		
11	SPACER		1		
12	SCREW		3		
13	WASHER		2		
14	CLAMP		1	1	
15	CLAMP		1		
16	PIPE		1	1	
17	GASKET	1	1	1	
17	GASKET (ARC0002)	2	2	2	
18	PLUG	1	1	1	
19	SHEAT	1	1	1	
20	ADAPTOR BOLT	1	1	1	
21	ADAPTOR	1	1		
22	GASKET	1	1		
23	ADAPTOR	1	1		
24	ADAPTOR	1	1	1	
25	PLUG	1	1	1	
26	ADAPTOR		1		
27	GASKET		1		
28	WATER PUMP ASSY		1		
29	SCREW		6		
30	GASKET		1		
31	GASKET		1		