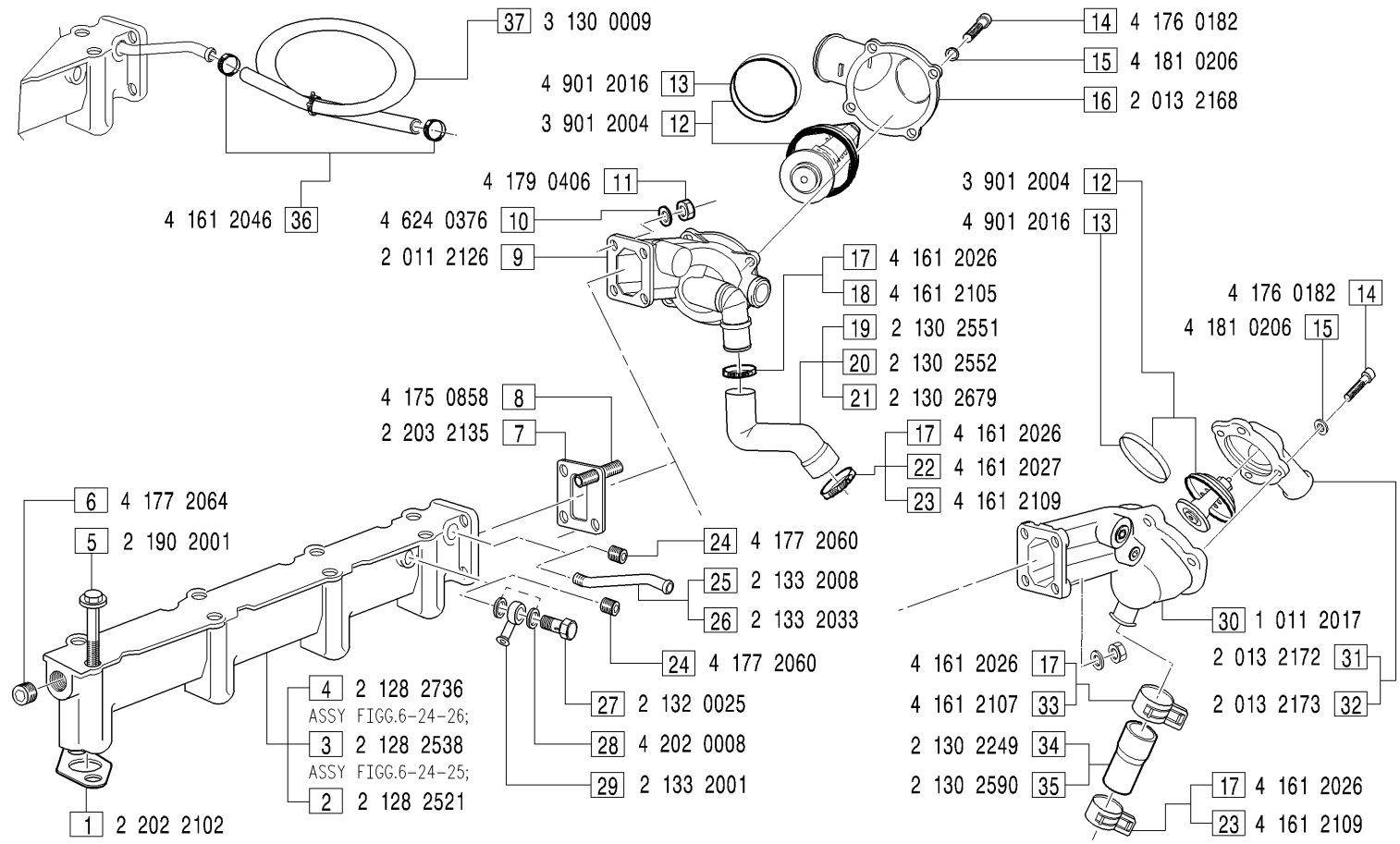

GRUPPI VALVOLA TERMOSTATICA - *Thermostatic valve groups*

VTE0008 - **VTE0016**: FIGG.1-3-5-7-8-9-10-11-12-14-15-16-17-20; **VTE0009**: FIGG.1-2-5-6-7-8-9-10-11-12-14-15-16-17-20-24-27-28-29;

VTE0011 - **VTE0020**: FIGG.1-3-5-7-8-9-10-11-12-14-15-16-17-19; **VTE0018**: FIGG.1-4-5-7-8-9-10-11-12-14-15-16-17-21-22; **VTE0023**: FIGG.1-3-5-7-8-9-10-11-12-14-15-16-17-20-36-37;

VTE0025: FIGG.1-3-5-6-7-8-10-11-12-14-15-17-30-31-34; **VTE0029**: FIGG.1-2-5-6-7-8-9-10-11-12-14-15-16-18-21-23-24-27-28-29; **VTE0030**: FIGG.1-4-5-7-8-10-11-12-14-15-23-30-32-33-35;

MODIFICATIONS MODIFICHE ÄNDERUNGEN MODIFICACIÓN

Pos. N.	Code Codice	SIMBOLS SIMBOLI △	▲	⧄	EC	Up to serial nr. Fino a matricola

Pos. N.	DESCRIPTION DESCRIZIONE	Quantity (Q.tà) 703	704	706
34	SHEAT		1	
35	SHEAT		1	
36	CLAMP		2	
37	PIPE L = m. 0.025		1	