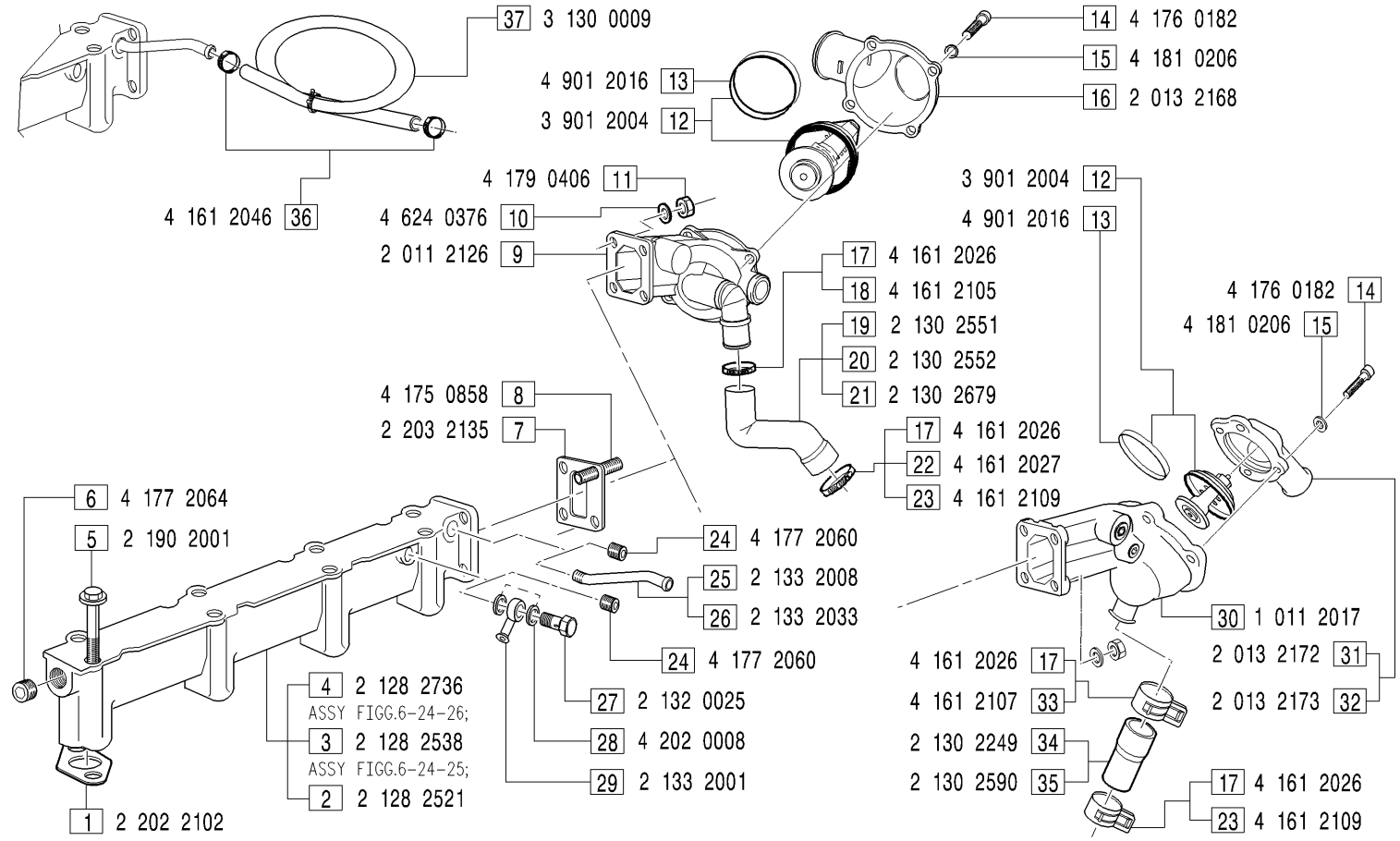

GRUPPI VALVOLA TERMOSTATICA - *Thermostatic valve groups*

VTE0008 - **VTE0016**: FIGG.1-3-5-7-8-9-10-11-12-14-15-16-17-20; **VTE0009**: FIGG.1-2-5-6-7-8-9-10-11-12-14-15-16-17-20-24-27-28-29;
VTE0011 - **VTE0020**: FIGG.1-3-5-7-8-9-10-11-12-14-15-16-17-19; **VTE0018**: FIGG.1-4-5-7-8-9-10-11-12-14-15-16-17-21-22; **VTE0023**: FIGG.1-3-5-7-8-9-10-11-12-14-15-16-17-20-36-37;
VTE0025: FIGG.1-3-5-6-7-8-10-11-12-14-15-17-30-31-34; **VTE0029**: FIGG.1-2-5-6-7-8-9-10-11-12-14-15-16-18-21-23-24-27-28-29; **VTE0030**: FIGG.1-4-5-7-8-10-11-12-14-15-23-30-32-33-35;

MODIFICATIONS MODIFICHE ÄNDERUNGEN MODIFICACIÓN						
Pos. N.	Code Codice	SIMBOLS SIMBOLI △	▲	⧄	EC	Up to serial nr. Fino a matricola

Pos. N.	DESCRIPTION DESCRIZIONE	Quantity (Q.tà) 703	704	706	
1	GASKET		4		
2	WATER MANIFOLD		1		
3	WATER MANIFOLD ASSY		1		
4	WATER MANIFOLD ASSY		1		
5	SCREW		8		
6	PLUG		1		
7	GASKET		1		
8	STUD		4		
9	THERMOSTAT HSG ASSY		1		
10	WASHER		4		
11	NUT		4		
12	THERMOSTAT ASSY		1		
13	GASKET		1		
14	SCREW		4		
15	WASHER		4		
16	COVER		1		
17	CLAMP		2		
17	CLAMP (VTE0018)		1		
18	CLAMP		1		
19	SHEAT		1		
20	SHEAT		1		
21	SHEAT		1		
22	CLAMP		1		
23	CLAMP		1		
24	PLUG		1		
25	SHEAT		1		
26	SHEAT		1		
27	UNION SCREW		1		
28	GASKET		2		
29	SHEAT		1		
30	THERMOSTAT HSG ASSY		1		
31	COVER		1		
32	COVER		1		
33	CLAMP		1		