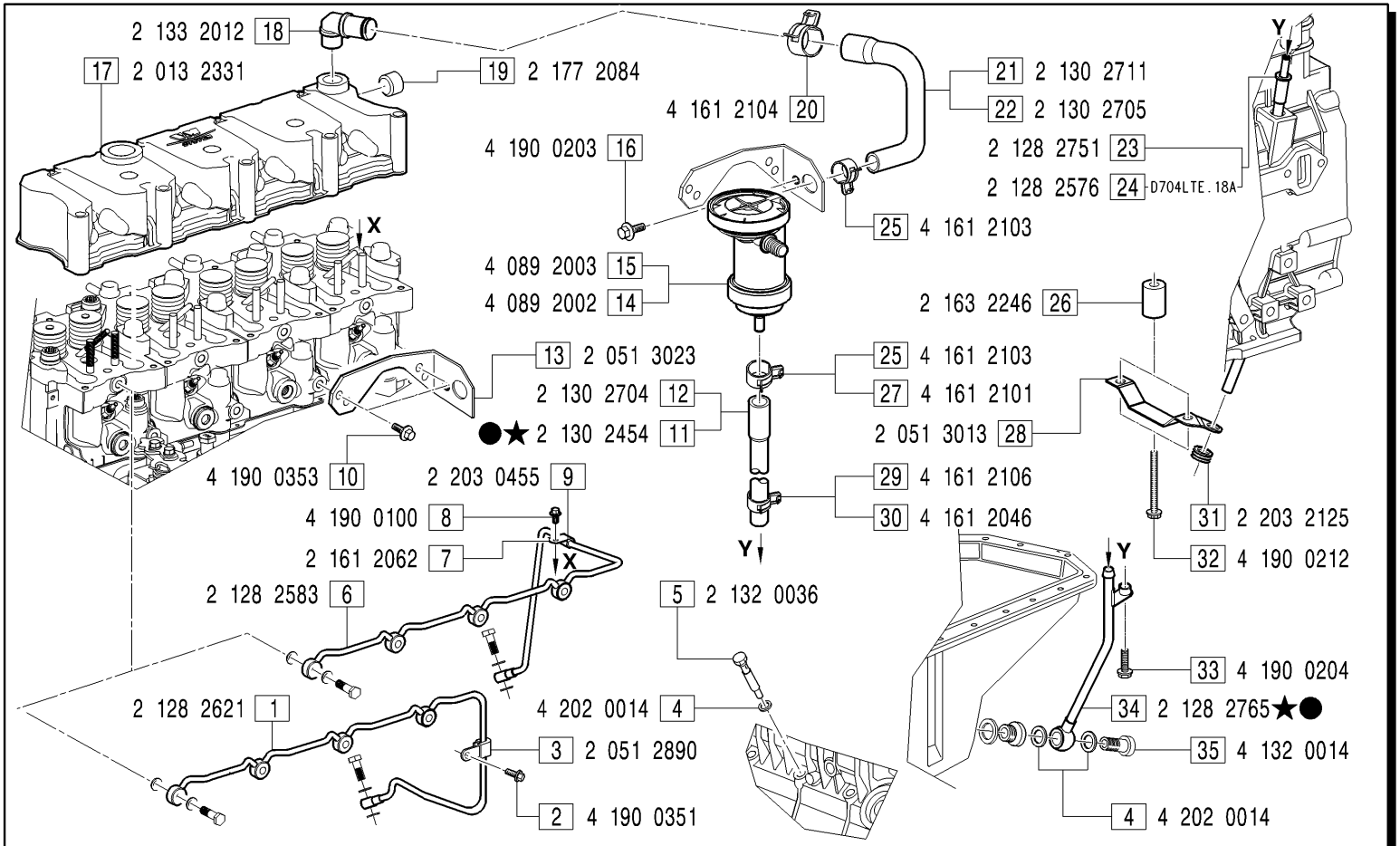

GRUPPI COPERCHIO BILANCIERI - *Rocher arm cover groups*

COB0018 : FIGG.1-2-3-4-10-11-13-14-16-17-18-19-20-21-25-27-29-33-34-35;

COB0030 : FIGG.4-5-6-7-8-9-12-15-17-18-19-20-22-23-25-26-28-30-31-32;

MODIFICATIONS-MODIFICHE-ÄNDERUNGEN-MODIFICACIÓN

Pos. N.	Code Codice	SIMBOLS SIMBOLI △	▲	⧄	EC	Up to serial nr. Fino a matricola
11	2 130 2712	X		X		
34	2 128 2757	X		X		

Pos. N.	DESCRIPTION DESCRIZIONE	Quantity (Q.tà) 703	704	706	
1	ROCKER OIL FEED PIPE		1		
2	SCREW		1		
3	BRACKET		1		
4	GASKET (COB0030)		1		
4	GASKET (COB0018)		2		
5	ADAPTOR BOLT		1		
6	ROCKER OIL FEED PIPE		1		
7	CLAMP		1		
8	SCREW		1		
9	GASKET		1		
10	SCREW		2		
11	PIPE		1		
12	PIPE		1		
13	BRACKET		1		
14	OIL SEPARATOR		1		
15	OIL SEPARATOR		1		
16	SCREW		1		
17	ROCKER ARM COVER		1		
18	SHEAT		1		
19	PLUG		1		
20	CLAMP		1		
21	PIPE		1		
22	PIPE		1		
23	PIPE		1		
24	PIPE		1		
25	CLAMP		2		
26	SPACER		2		
27	CLAMP		1		
28	BRACKET		1		
29	CLAMP		1		
30	CLAMP		1		
31	GASKET		1		
32	SCREW		2		
33	SCREW		1		