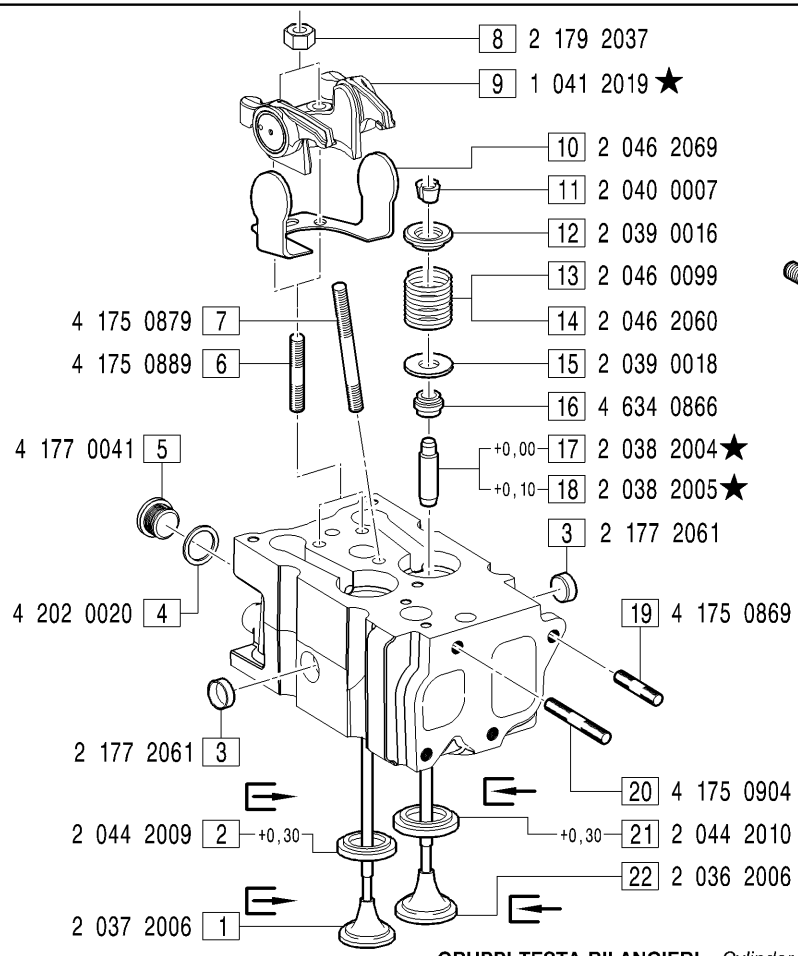

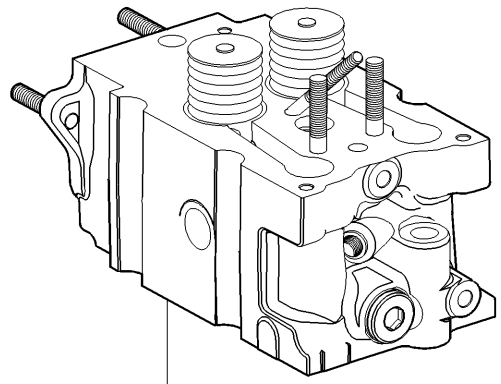

23 1 035 2058★
ASSY FIGG.1-3-4-5-6-7-11-12-13-15-16-17-19-20-22;

24 1 035 2055
ASSY FIGG.1-3-4-5-6-7-11-12-14-15-16-17-19-20-22;

GRUPPI TESTA BILANCIERI - *Cylinder head and rocker arm groups*

TES0001 - **TES0002** : FIGG.8-9-10-23;

TES0003 - **TES0004**: FIGG.8-9-10-24;

MODIFICATIONS-MODIFICHE-ÄNDERUNGEN-MODIFICACIÓN

Pos. N.	Code Codice	SIMBOLS SIMBOLI △	▲	⧄	EC	Up to serial nr. Fino a matricola
9	1 041 2016	X		X		
9	1 041 2017		X			21B 22B - 03028; 27B - 01533
17	2 038 0025		X			21B 22B - 01310
18	2 038 2027		X			27B - 01033
23	1 035 2047		X			21B 22B - 06048; 27B - 02416

Pos. N.	DESCRIPTION DESCRIZIONE	Quantity (Q.tà) 703	704	706	
1	EXHAUST VALVE		4	6	
2	EXHAUST VALVE SEAT +0.30		4	6	
3	PLUG		8	12	
4	GASKET		4	6	
5	PLUG		4	6	
6	STUD		8	12	
7	STUD		4	6	
8	NUT		8	12	
9	ROCKER ARM ASSY		4	6	
10	SPRING		4	6	
11	HALF COLLET		16	24	
12	UPPER SPRING PLATE		8	12	
13	SPRING		8	12	
14	SPRING		8	12	
15	LOWER SPRING PLATE		8	12	
16	SEAL RING		8	12	
17	VALVE GUIDE +0.00		8	12	
18	VALVE GUIDE +0.10		8	12	
19	STUD		8	12	
20	STUD		8	12	
21	INTAKE VALVE SEAT +0.30		4	6	
22	INTAKE VALVE		4	6	
23	CYLINDER HEAD ASSY		4	6	
24	CYLINDER HEAD ASSY		4	6	