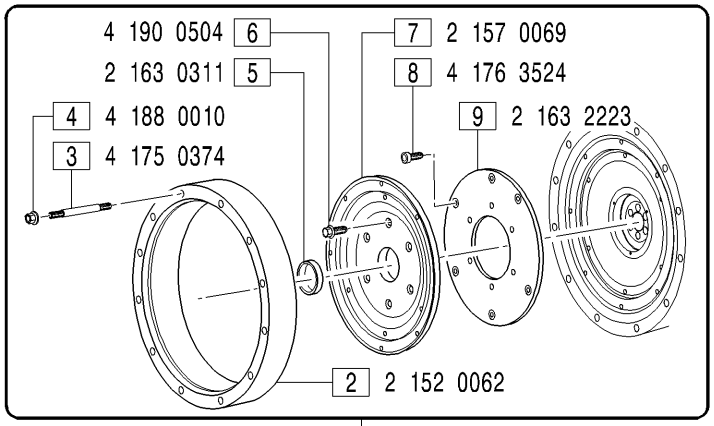

1 1 227 2147

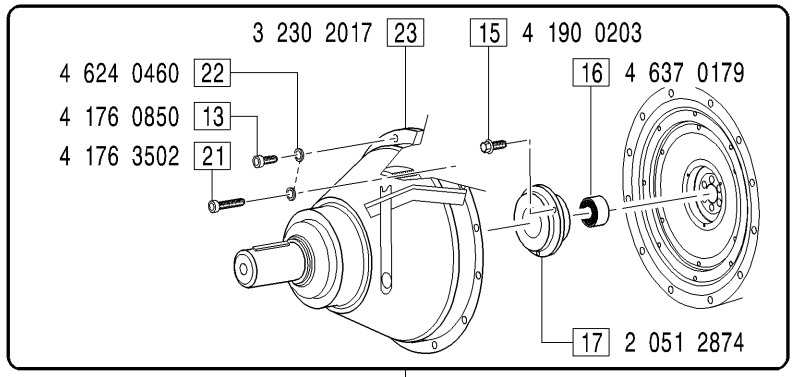

20 1 227 2142

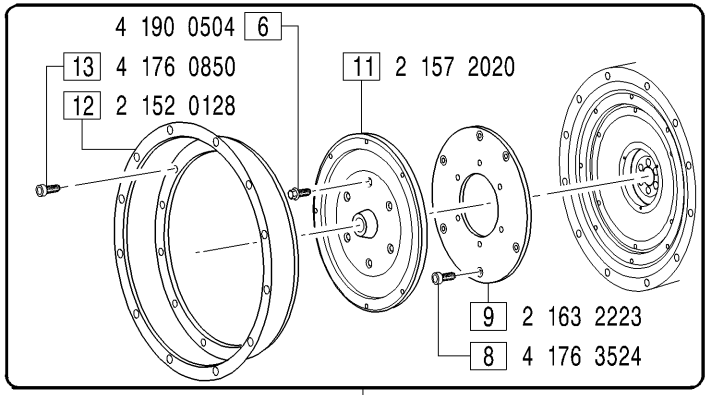

10 1 227 2150

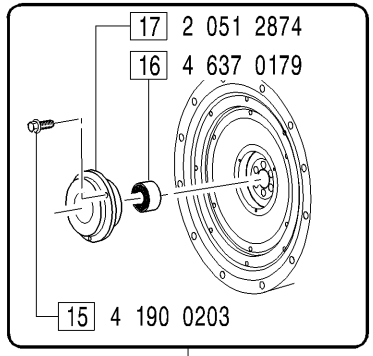

14 1 227 2168

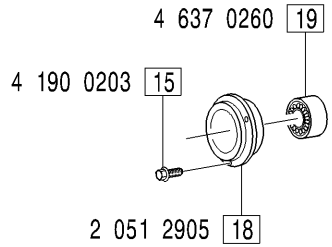

GRUPPI PREDISPOSIZIONE FRIZIONE - *Clutche P.t.O. groups*

FRI0003: FIG.1; **FRI0004**: FIG.10; **FRI0005**: FIG.14; **FRI0006**: FIGG.15-18-19; **FRI0007**: FIG.20;

MODIFICATIONS-MODIFICHE-ÄNDERUNGEN-MODIFICACIÓN						
Pos. N.	Code Codice	SIMBOLS SIMBOLI △	▲	⧄	EC	Up to serial nr. Fino a matricola

Pos. N.	DESCRIPTION DESCRIZIONE	Quantity (Q.tà) 703	704	706	
1	APPLICATION ASSY	1	1	1	
2	RING	1	1	1	
3	STUD	12	12	12	
4	NUT	12	12	12	
5	SPACER	1	1	1	
6	SCREW	6	6	6	
7	CLUTCH UNION DISC	1	1	1	
8	SCREW	6	6	6	
9	SPACER	1	1	1	
10	APPLICATION ASSY	1	1	1	
11	CAPSTAN DISC	1	1	1	
12	ADAPTOR	1	1	1	
13	SCREW	12	12	12	
14	APPLICATION ASSY	1	1		
15	SCREW	3	3	3	
16	BEARING	1	1		
17	BEARING SUPPORT	1	1		
18	BEARING SUPPORT	1	1	1	
19	BEARING	1	1	1	
20	APPLICATION ASSY	1	1		
21	SCREW	8	8		
22	WASHER	20	20		
23	CLUTCH	1	1		