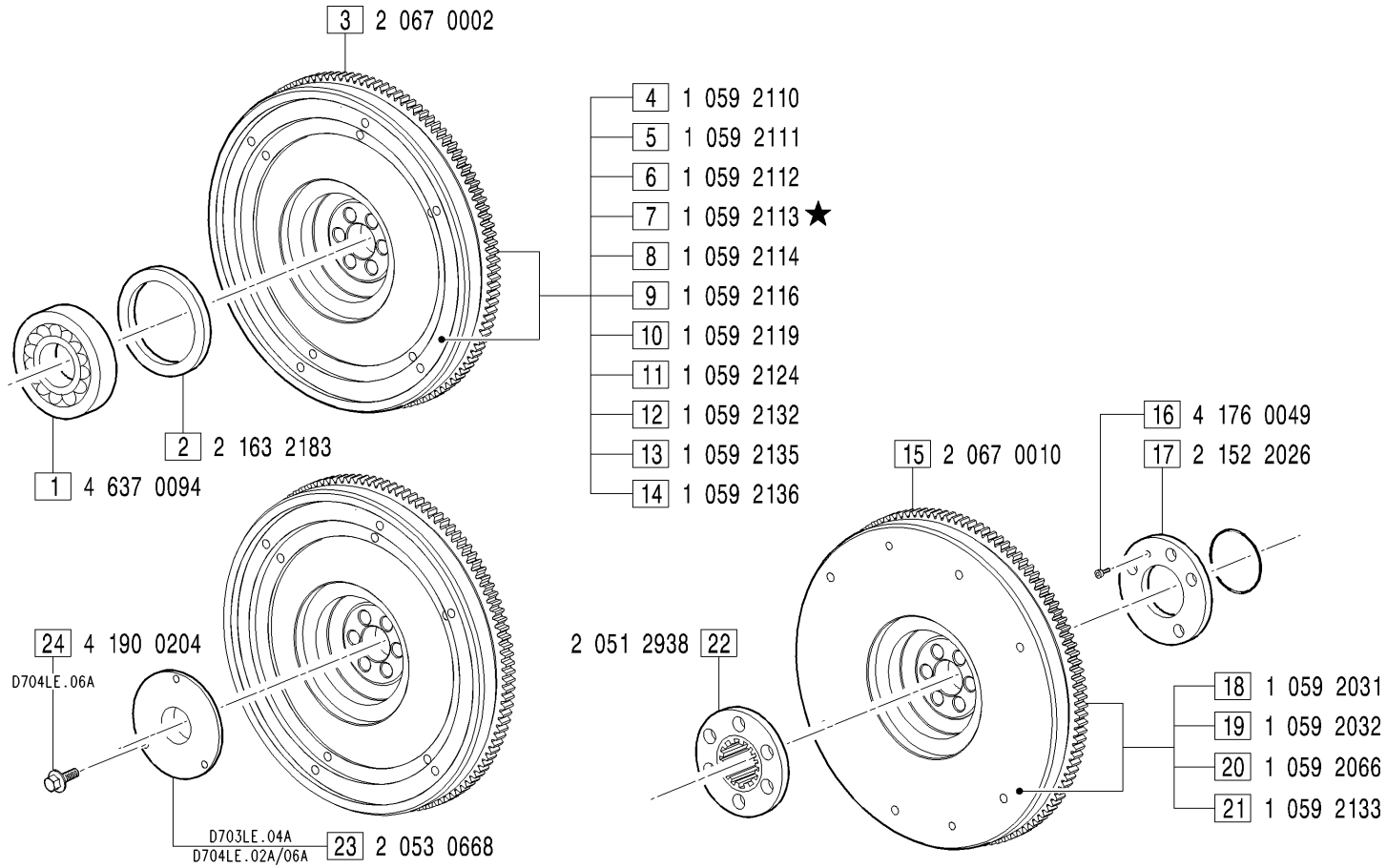

GRUPPI VOLANO - *Flywheel groups*

VOL0001: FIG.7; **VOL0002**: FIG.11; **VOL0003**: FIG.6; **VOL0004**: FIG.9; **VOL0005**: FIG.12;
VOL0006: FIG.13; **VOL0007**: FIG.4; **VOL0008**: FIG.16-17-19; **VOL0009**: FIG.16-17-18; **VOL0010**: FIG.8;
VOL0011: FIGG.15-16-19; **VOL0013**: FIGG.1-2-6; **VOL0015**: FIGG.21-22; **VOL0017**: FIGG.1-2-10; **VOL0018**: FIG.5; **VOL0019**: FIG.14;

MODIFICATIONS MODIFICHE ÄNDERUNGEN MODIFICACIÓN

Pos. N.	Code Codice	SIMBOLS SIMBOLI △	▲	⧄	EC	Up to serial nr. Fino a matricola
7	1 059 2106		X			28B, 29B - 03883 21B, 22B - 06048 27B - 02421 75B - 01047 76B - 01014 77B - 01159 78B - 01015

Pos. N.	DESCRIPTION DESCRIZIONE	Quantity (Q.tà) 703	704	706	
1	BALL BEARING	1	1	1	
2	SPACER	1	1	1	
3	RING GEAR	1	1	1	
4	FLYWHEEL ASSY	1	1		
5	FLYWHEEL ASSY	1	1	1	
6	FLYWHEEL ASSY	1	1	1	
7	FLYWHEEL ASSY	1	1	1	
8	FLYWHEEL ASSY	1	1	1	
9	FLYWHEEL ASSY	1	1	1	
10	FLYWHEEL ASSY	1	1	1	
11	FLYWHEEL ASSY	1	1	1	
12	FLYWHEEL ASSY	1	1	1	
13	FLYWHEEL ASSY	1	1	1	
14	FLYWHEEL ASSY	1	1	1	
15	RING GEAR	1	1	1	
16	SCREW	1	1	1	
17	SPACER	1	1	1	
18	FLYWHEEL ASSY	1	1	1	
19	FLYWHEEL ASSY	1	1	1	
20	FLYWHEEL ASSY	1	1	1	
21	FLYWHEEL ASSY	1	1	1	
22	SUPPORT BEARING	1	1	1	
23	SUPPORT BEARING	1	1		
24	SCREW		3		