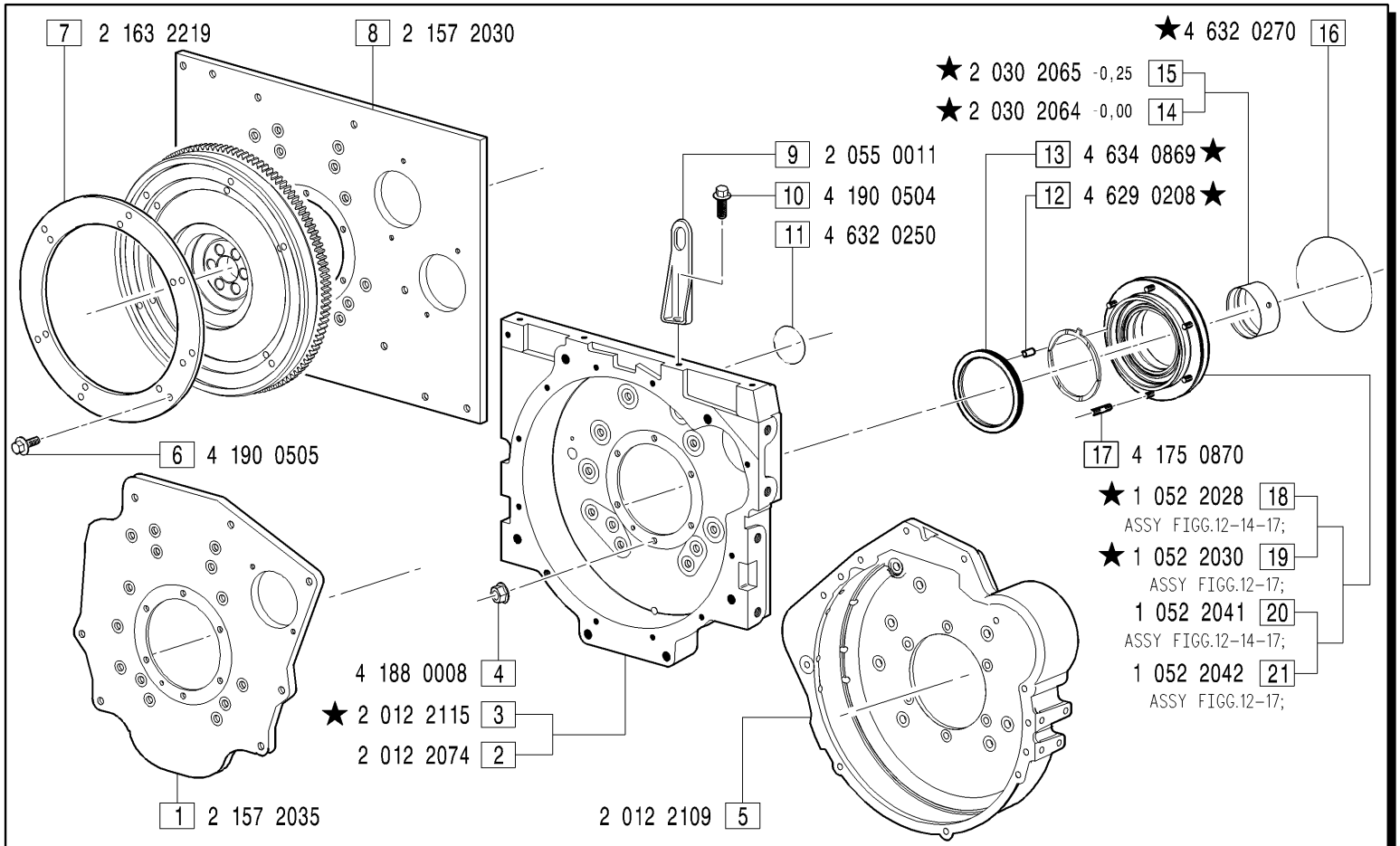

GRUPPI CAMPANA - *Flywheel housing groups*

CAM0008: FIGG.1-4-11-13-16-18;

CAM0013: FIGG.4-5-11-13-16-18; **CAM0014**: FIGG.2-4-9-10-11-13-16-18;

CAM0018: FIGG.3-4-11-13-16-18; **CAM0020**: FIGG.4-6-7-8-11-13-16-20;

MODIFICATIONS-MODIFICHE-ÄNDERUNGEN-MODIFICACIÓN

Pos. N.	Code Codice	SIMBOLS SIMBOLI △	▲	⧄	EC	Up to serial nr. Fino a matricola
3	2 012 2099	X		X		
						28B, 29B - 03883
13	4 634 0862		X			21B, 22B - 06048
14	2 030 0290		X			
15	2 030 0274		X			27B - 02321
18	1 052 2024		X			75B - 01047
19	1 052 2020		X			76B - 01014
						77B - 01159
						78B - 01015
12	4 629 0203	X		X		
16	4 632 0530	X		X		

Pos. N.	DESCRIPTION DESCRIZIONE	Quantity (Q.tà) 703	704	706	
1	ADAPTOR PLATE	1	1	1	
2	FLYWHEEL HOUSING	1	1	1	
3	FLYWHEEL HOUSING	1	1	1	
4	NUT	6	6	6	
5	FLYWHEEL HOUSING	1	1	1	
6	SCREW		6	6	
7	SPACER		1	1	
8	ADAPTOR PLATE		1	1	
9	LIFTING EYE	1	1	1	
10	SCREW	1	1	1	
11	O RING	1	1	1	
12	SPRING PIN	1	1	1	
13	SEAL RING	1	1	1	
14	BEARING - 0,00	1	1	1	
15	BEARING - 0,25	1	1	1	
16	O RING	1	1	1	
17	STUD	6	6	6	
18	SHAFT BRACKET ASSY WITH BUSHING	1	1	1	
19	SHAFT BRACKET ASSY WITHOUT BUSHING	1	1	1	
20	SHAFT BRACKET ASSY WITH BUSHING		1	1	
21	SHAFT BRACKET ASSY WITHOUT BUSHING		1	1	