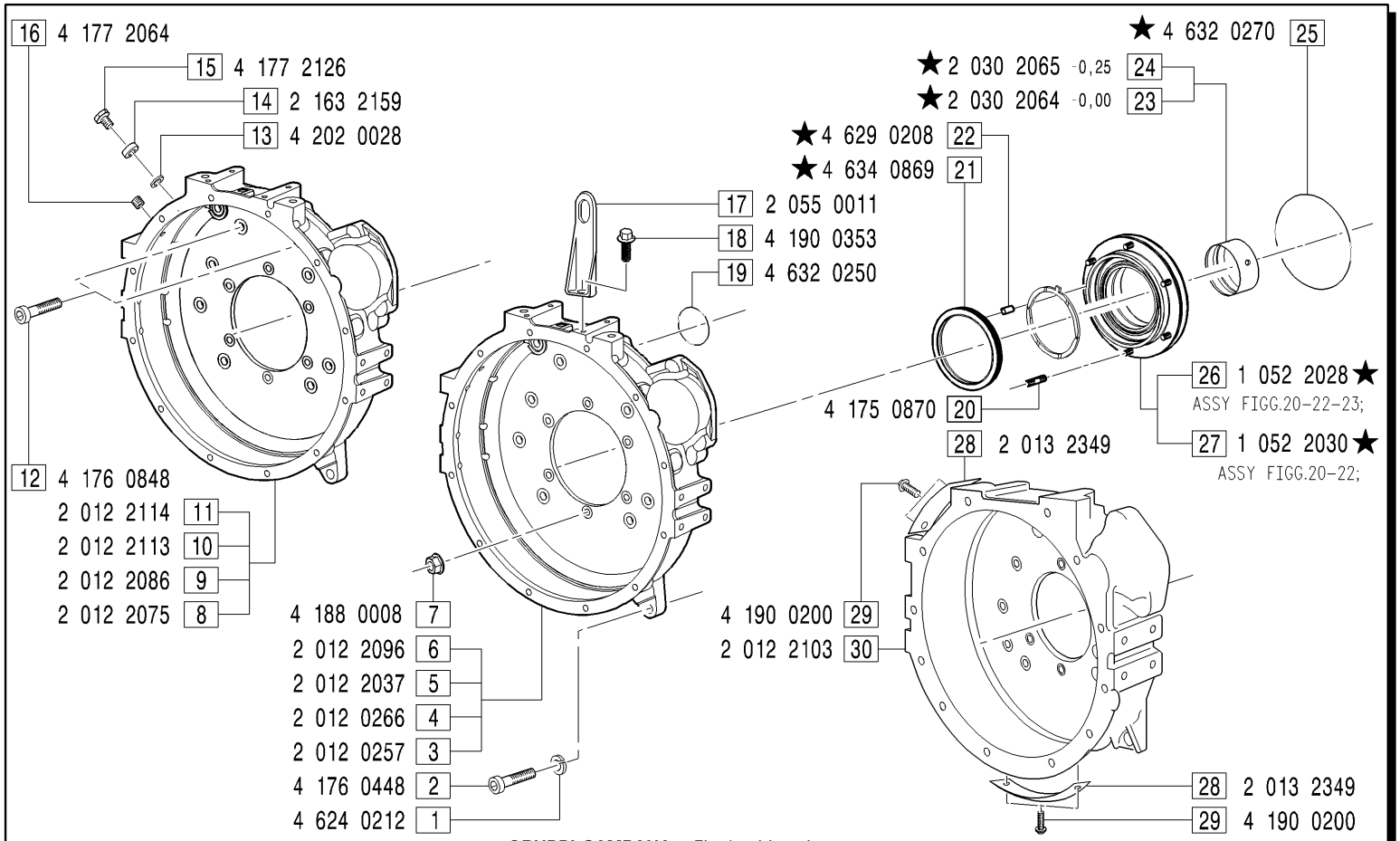

GRUPPI CAMPANA - *Flywheel housing groups*

CAM0001: FIGG.7-8-19-21-25-26;
CAM0002: FIGG.6-7-19-21-25-26;
CAM0003: FIGG.7-19-21-25-26-28-29-30;
CAM0006: FIGG.3-7-19-21-25-26;
CAM0007: FIGG.7-9-17-18-19-21-25-26;
CAM0009: FIGG.1-2-5-7-17-18-19-21-25-26;
CAM0010: FIGG.7-11-16-19-21-25-26;
CAM0012: FIGG.7-9-12-17-18-19-21-25-26;
CAM0015: FIGG.7-11-13-14-15-16-19-21-25-26;
CAM0016: FIGG.7-10-12-17-18-19-21-25-26;
CAM0017: FIGG.7-8-17-18-19-21-25-26;
CAM0022: FIGG.4-7-19-21-25-26;

MODIFICATIONS-MODIFICHE-ÄNDERUNGEN-MODIFICACIÓN

Pos. N.	Code Codice	SIMBOLS SIMBOLI △	▲	⧄	EC	Up to serial nr. Fino a matricola
						28B, 29B - 03883
21	4 634 0862		X			21B, 22B - 06048
23	2 030 0290		X			
24	2 030 0274		X			27B - 02421
26	1 052 2024		X			75B - 01047
27	1 052 2020		X			76B - 01014
						77B - 01159
						78B - 01015
22	4 629 0203	X		X		
25	4 632 0530	X		X		

Pos. N.	DESCRIPTION DESCRIZIONE	Quantity (Q.tà) 703	704	706		Pos. N.	DESCRIPTION DESCRIZIONE	703	704	706		Pos. N.	DESCRIPTION DESCRIZIONE	703	704	706		Pos. N.	DESCRIPTION DESCRIZIONE	703	704	706	
1	WASHER	2	2	2		8	FLYWHEEL HOUSING	1	1	1		17	LIFTING EYE	1	1	1		26	SHAFT BRACKET ASSY WITH BUSHING	1	1	1	
2	SCREW	2	2	2		9	FLYWHEEL HOUSING	1	1	1		18	SCREW	1	1	1		27	SHAFT BRACKET ASSY WITHOUT BUSHING	1	1	1	
3	FLYWHEEL HOUSING	1	1	1		10	FLYWHEEL HOUSING	1	1	1		19	O RING	1	1	1		28	LOCKUP PLAQUE	2	2	2	
4	FLYWHEEL HOUSING	1	1	1		11	FLYWHEEL HOUSING	1	1	1		20	STUD	6	6	6		29	SCREW	4	4	4	
5	FLYWHEEL HOUSING	1	1	1		12	SCREW	2	2	2		21	SEAL RING	1	1	1		30	FLYWHEEL HOUSING	1	1	1	
6	FLYWHEEL HOUSING	1	1	1		13	GASKET	1	1	1		22	SPRING PIN	1	1	1							
7	NUT	6	6	6		14	SPACER	1	1	1		23	BEARING - 0,00	1	1	1							
						15	PLUG	1	1	1		24	BEARING - 0,25	1	1	1							
						16	PLUG	1	1	1		25	O RING	1	1	1							