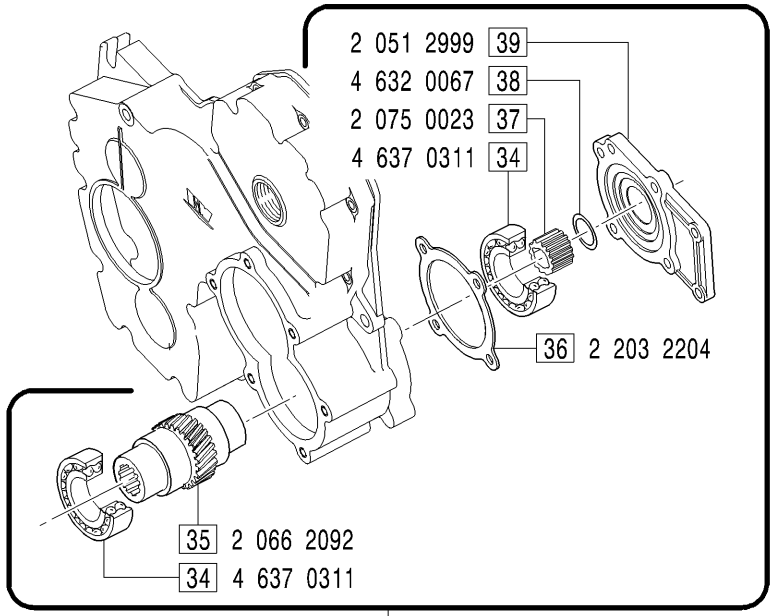

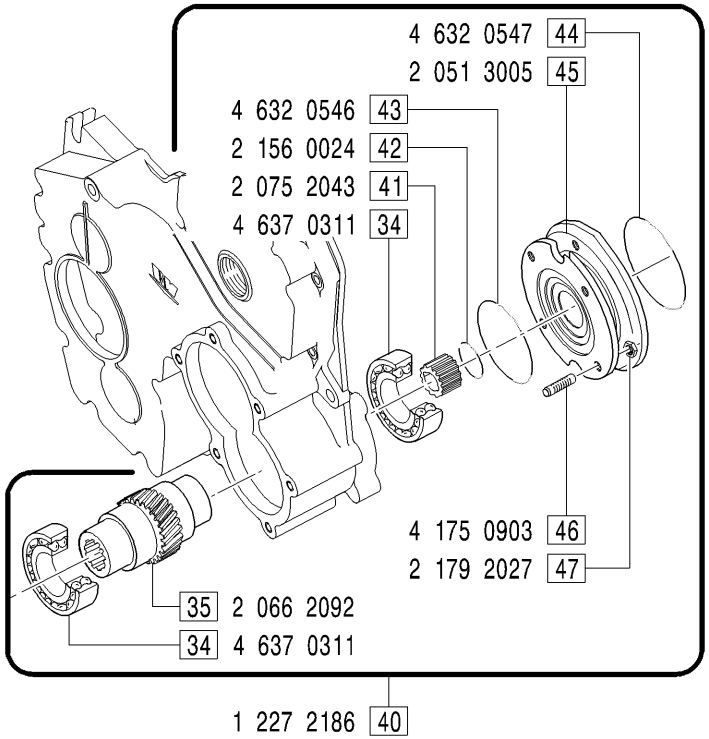

GRUPPI COPERCHIO ANTERIORE - *Front cover groups*

COD0017: FIGG.4-5-6-13-14-15-16-17-18-19-20-21-22-23-24-25-26-27-28-29-30-31-32-33; **COD0018**: FIGG.1-3-5-7-13-14-15-16-17-18-19-20-21-22-23-24-25-26-27-28-29-30-31-32;
COD0019: FIGG.2-4-5-8-13-14-15-16-17-18-19-20-21-22-23-24-25-26-27-28-29-30-31-32;
COD0024: FIGG.1-2-3-5-7-9-10-11-12-15-16-17-18-19-20-21-22-23-24-25-26-27-28-29-30-31-32-33;
COD0025: FIGG.1-3-5-7-13-14-15-16-17-18-19-20-21-22-23-24-25-26-27-28-29-30-31-32-33; **COD0028**: FIGG.2-4-5-8-13-14-15-16-17-18-19-20-21-22-23-24-25-26-27-28-29-30-31-32-33;
COD0029: FIGG.1-3-5-7-13-14-15-16-17-18-19-20-21-22-23-24-25-26-27-28-29-30-31-32-40; **COD0030**: FIGG.2-4-5-8-13-14-15-16-17-18-19-20-21-22-23-24-25-26-27-28-29-30-31-32-40;

MODIFICATIONS-MODIFICHE-ÄNDERUNGEN-MODIFICACIÓN

Pos. N.	Code Codice	SIMBOLS SIMBOLI △	▲	⧄	EC	Up to serial nr. Fino a matricola
23	2 203 2161	X		X		

Pos. N.	DESCRIPTION DESCRIZIONE	Quantity (Q.tà) 703	704	706	
35	GEAR		1	1	
36	GASKET		1	1	
37	HUB		1	1	
38	O RING		1	1	
39	SUPPORT		1	1	
40	REAR ADAPTOR ASSY		1	1	
41	HUB		1	1	
42	RING		1	1	
43	O RING		1	1	
44	O RING		1	1	
45	SUPPORT		1	1	
46	STUD		4	4	
47	NUT		4	4	