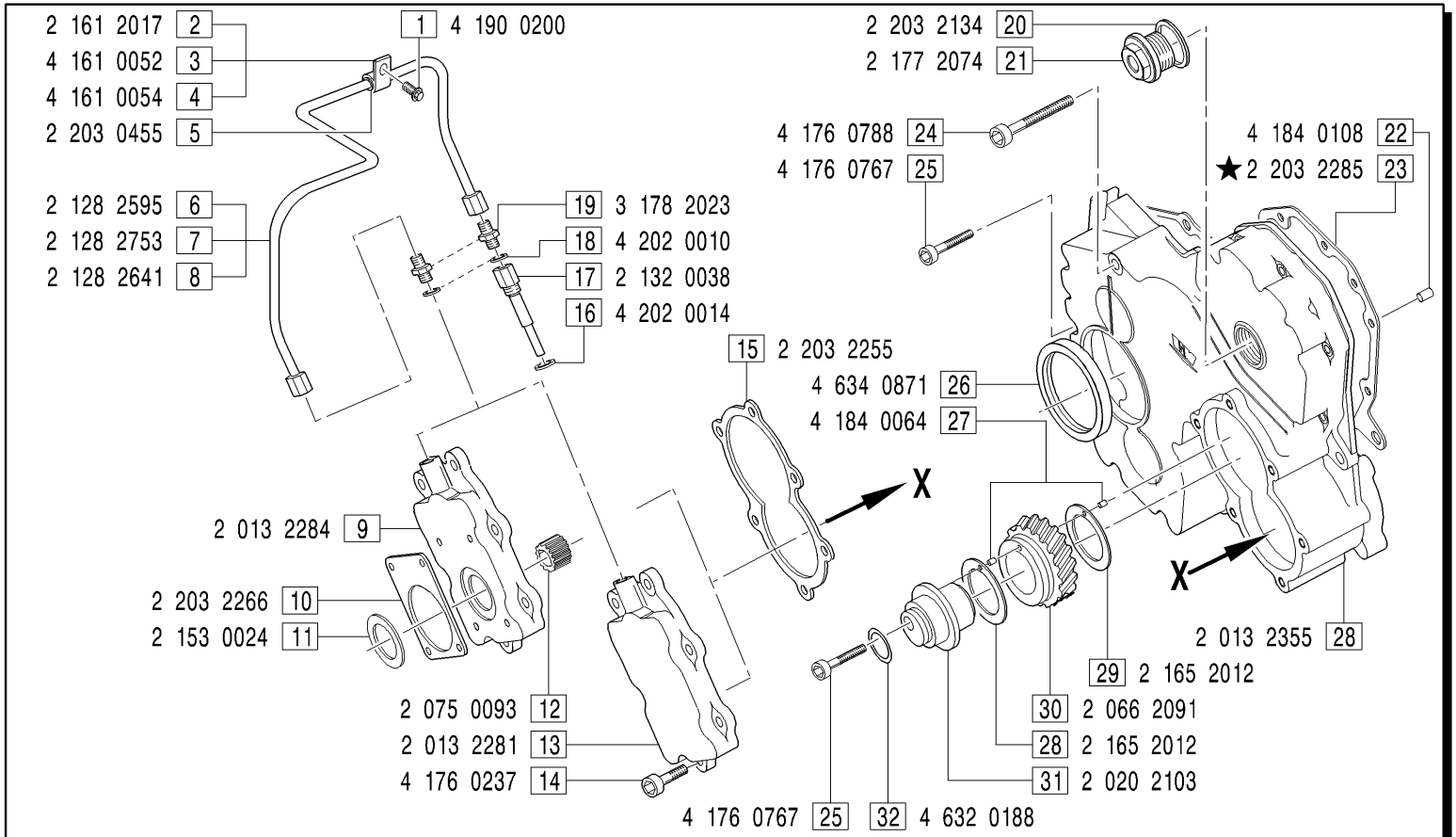

GRUPPI COPERCHIO ANTERIORE - *Front cover groups*

COD0017: FIGG.4-5-6-13-14-15-16-17-18-19-20-21-22-23-24-25-26-27-28-29-30-31-32-33; **COD0018**: FIGG.1-3-5-7-13-14-15-16-17-18-19-20-21-22-23-24-25-26-27-28-29-30-31-32;

COD0019: FIGG.2-4-5-8-13-14-15-16-17-18-19-20-21-22-23-24-25-26-27-28-29-30-31-32;

COD0024: FIGG.1-2-3-5-7-9-10-11-12-15-16-17-18-19-20-21-22-23-24-25-26-27-28-29-30-31-32-33;

COD0025: FIGG.1-3-5-7-13-14-15-16-17-18-19-20-21-22-23-24-25-26-27-28-29-30-31-32-33; **COD0028**: FIGG.2-4-5-8-13-14-15-16-17-18-19-20-21-22-23-24-25-26-27-28-29-30-31-32-33;

COD0029: FIGG.1-3-5-7-13-14-15-16-17-18-19-20-21-22-23-24-25-26-27-28-29-30-31-32-40; **COD0030**: FIGG.2-4-5-8-13-14-15-16-17-18-19-20-21-22-23-24-25-26-27-28-29-30-31-32-40;

MODIFICATIONS-MODIFICHE-ÄNDERUNGEN-MODIFICACIÓN						
Pos. N.	Code Codice	SIMBOLS SIMBOLI △	▲	⧄	EC	Up to serial nr. Fino a matricola
23	2 203 2161	X		X		

Pos. N.	DESCRIPTION DESCRIZIONE	Quantity (Q.tà) 703	704	706		Pos. N.	DESCRIPTION DESCRIZIONE	703	704	706		Pos. N.	DESCRIPTION DESCRIZIONE	703	704	706		Pos. N.	DESCRIPTION DESCRIZIONE	703	704	706	
1	SCREW		1			8	LUBRIFICATION PIPE		1			17	ADAPTOR BOLT		1	1		26	SEAL RING		1	1	
2	CLAMP		1	1		9	COVER	1	1			18	GASKET		2	2		27	DOWEL		2	2	
3	CLAMP		1	1		10	GASKET	1	1			19	UNION		2	2		28	FRONT COVER		1	1	
4	CLAMP		1	1		11	RING	1	1			20	GASKET		1	1		29	RING		2	2	
5	GASKET		2	2		12	HUB	1	1			21	PLUG		1	1		30	GEAR		1	1	
6	LUBRIFICATION PIPE		1			13	COVER	1	1			22	DOWEL		2	2		31	PIN BEARING		1	1	
7	LUBRIFICATION PIPE		1			14	SCREW	6	6			23	GASKET		1	1		32	O RING		1	1	
						15	GASKET	1	1			24	SCREW		13	13		33	REAR ADAPTOR ASSY		1	1	
						16	GASKET	1	1			25	SCREW		1	1		34	BALL BEARING		2	2	