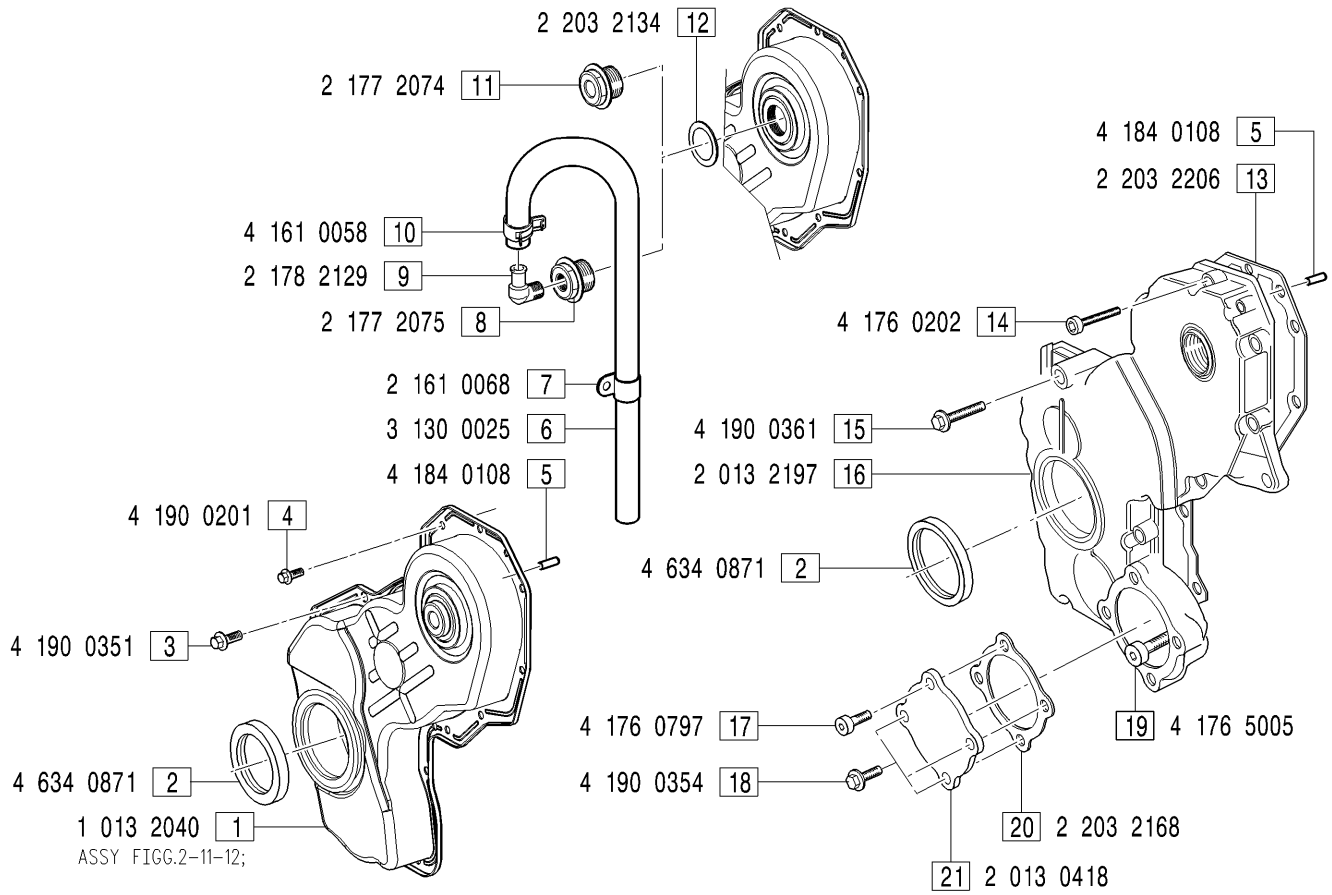


**GRUPPI COPERCHIO ANTERIORE** - *Front cover groups*

**COD0002**: FIGG.1-3-4-5; **COD0008**: FIGG.2-5-11-12-13-14-15-16-17-18-19-20-21; **COD0023**: FIGG.1-3-4-5-6-7-8-9-10-12;

| MODIFICATIONS MODIFICHE ÄNDERUNGEN MODIFICACIÓN | | | | | | |
|---|---|---|---|---|---|---|
| Pos. N. | Code Codice | SIMBOLS SIMBOLI △ | ▲ | ⧄ | EC | Up to serial nr. Fino a matricola |

| Pos. N. | DESCRIPTION DESCRIZIONE | Quantity (Q.tà) 703 | 704 | 706 | | Pos. N. | DESCRIPTION DESCRIZIONE | 703 | 704 | 706 | | Pos. N. | DESCRIPTION DESCRIZIONE | 703 | 704 | 706 | |
|---|---|---|---|---|---|---|---|---|---|---|---|---|---|---|---|---|---|
| 1 | FRONT COVER ASSY | | 1 | 1 | | 8 | PLUG | | 1 | 1 | | 17 | SCREW | | 1 | 1 | |
| 2 | FRONT SEAL RING | | 1 | 1 | | 9 | ADAPTOR | | 1 | 1 | | 18 | SCREW | | 3 | 3 | |
| 3 | SCREW | | 1 | 1 | | 10 | CLAMP | | 1 | 1 | | 19 | SCREW | | 1 | 1 | |
| 4 | SCREW | | 13 | 13 | | 11 | PLUG | | 1 | 1 | | 20 | GASKET | | 1 | 1 | |
| 5 | DOWEL | | 2 | 2 | | 12 | GASKET | | 1 | 1 | | 21 | COVER PLATE | | 1 | 1 | |
| 6 | PIPE L = mt. 0.650 | | 1 | 1 | | 13 | GASKET | | 1 | 1 | | | | | | | |
| 7 | CLAMP | | 1 | 1 | | 14 | SCREW | | 13 | 13 | | | | | | | |
| | | | | | | 15 | SCREW | | 1 | 1 | | | | | | | |
| | | | | | | 16 | FRONT COVER | | 1 | 1 | | | | | | | |