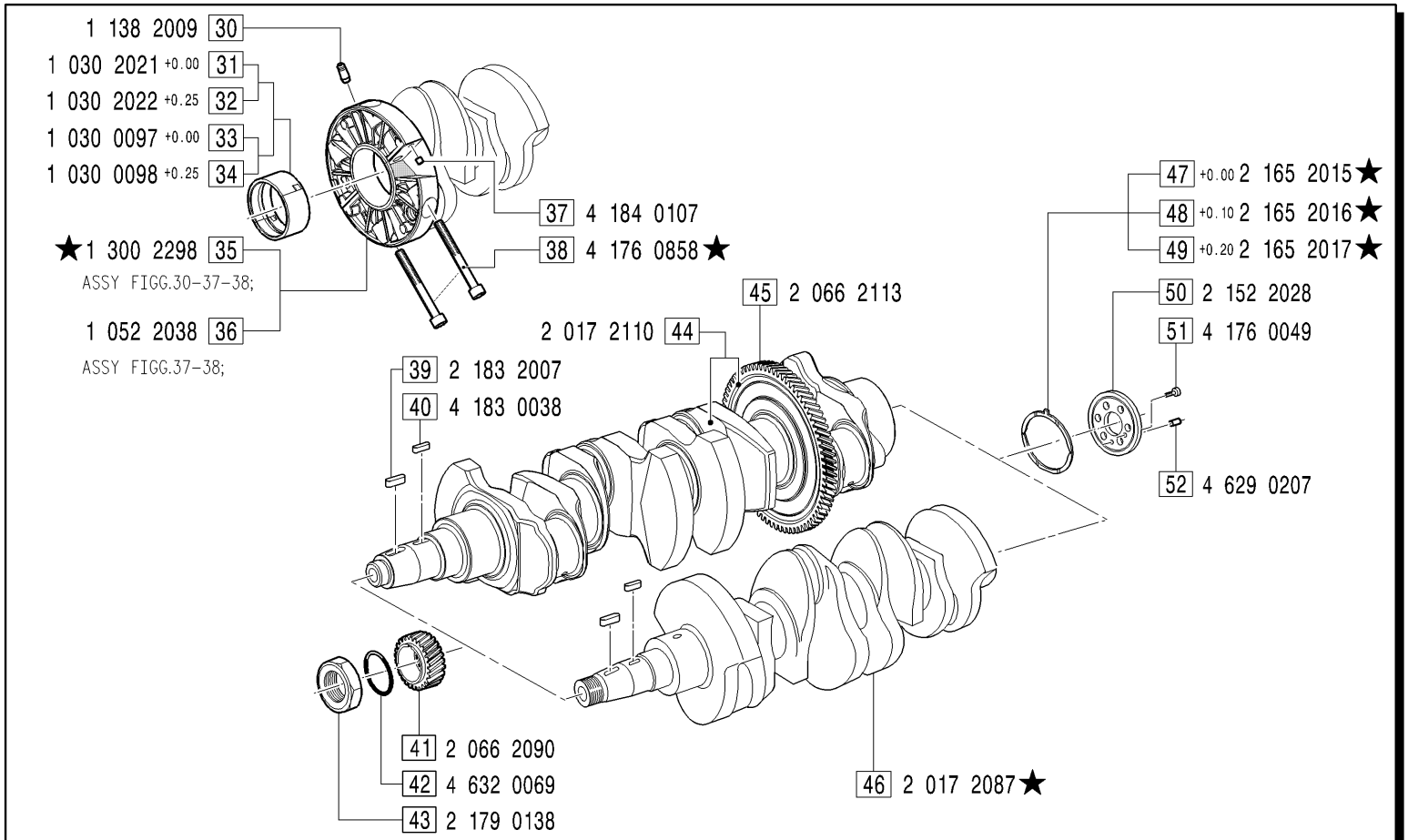

GRUPPI BASAMENTO - *Crankcase groups*

ADE0002: FIGG.5-6-11-15-16-18-19-20-21-33-35-39-40-41-42-43-46-47;

ADE0004: FIGG.5-6-11-15-17-18-19-20-21-33-35-39-40-41-42-43-46-47;

BAS0001: FIGG.5-6-7-8-10-33-35-39-40-41-42-43-46-47;

BAS0004: FIGG.5-6-7-8-9-33-35-39-40-41-42-43-46-47;

BAS0007: FIGG.5-6-7-8-12-26-27-28-29-30-31-36-39-40-41-42-43-44-47;

BAS0011: FIGG.5-6-7-8-10-33-35-39-40-41-42-43-46-47-50-51-52;

MODIFICATIONS-MODIFICHE-ÄNDERUNGEN-MODIFICACIÓN

Pos. N.	Code Codice	SIMBOLS SIMBOLI △	▲	⧄	EC	Up to serial nr. Fino a matricola
7	2 066 2094		X			21B - 04174
8	4 176 0231		X			22B
10	1 001 2113	X		X		21B - 09726 22B 76B - 01343 77B - 03392
35	1 052 2019	X		X		
38	4 176 3506	X		X		
	4 624 0310			X		
46	2 017 2083		X			21B - 06048
47	2 165 0005		X			22B
48	2 165 0018		X			76B - 01014
49	2 165 0019		X			77B - 01159

Pos. N.	DESCRIPTION DESCRIZIONE	Quantity (Q.tà) 703	704	706	
35	KIT SHAFT BRACKET		3		
36	SHAFT BRACKET ASSY		3		
37	TAPER PIN		6		
38	SCREW		6		
39	KEY		1		
40	KEY		1		
41	GEAR		1		
42	O RING		1		
43	NUT		1		
44	CRANKSHAFT ASSY		1		
45	GEAR		1		
46	CRANSHAFT		1		
47	THRUST WASER + 0,00		1		
48	THRUST WASER + 0,10		1		
49	THRUST WASER + 0,20		1		
50	SHIM RING		1		
51	SCREW		1		
52	SPRING PIN		1		