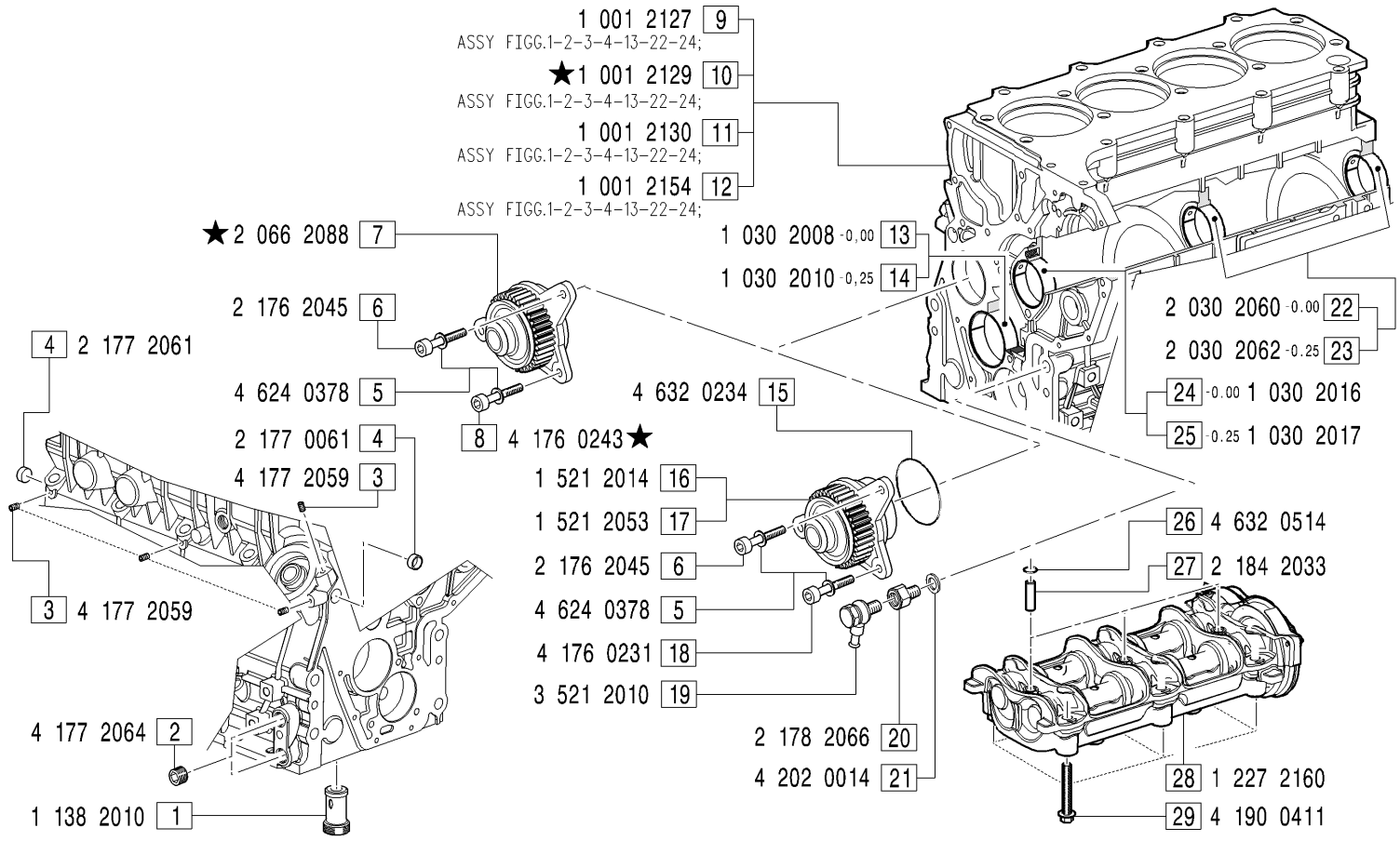

GRUPPI BASAMENTO - *Crankcase groups*

ADE0002: FIGG.5-6-11-15-16-18-19-20-21-33-35-39-40-41-42-43-46-47;

ADE0004: FIGG.5-6-11-15-17-18-19-20-21-33-35-39-40-41-42-43-46-47;

BAS0001: FIGG.5-6-7-8-10-33-35-39-40-41-42-43-46-47;

BAS0004: FIGG.5-6-7-8-9-33-35-39-40-41-42-43-46-47;

BAS0007: FIGG.5-6-7-8-12-26-27-28-29-30-31-36-39-40-41-42-43-44-47;

BAS0011: FIGG.5-6-7-8-10-33-35-39-40-41-42-43-46-47-50-51-52;

MODIFICATIONS-MODIFICHE-ÄNDERUNGEN-MODIFICACIÓN

Pos. N.	Code Codice	SIMBOLS SIMBOLI △	▲	⧄	EC	Up to serial nr. Fino a matricola
7	2 066 2094		X			21B - 04174
8	4 176 0231		X			22B
10	1 001 2113	X		X		21B - 09726 22B 76B - 01343 77B - 03392
35	1 052 2019	X		X		
38	4 176 3506	X		X		
	4 624 0310			X		
46	2 017 2083		X			21B - 06048
47	2 165 0005		X			22B
48	2 165 0018		X			76B - 01014
49	2 165 0019		X			77B - 01159

Pos. N.	DESCRIPTION DESCRIZIONE	Quantity (Q.tà) 703	704	706		Pos. N.	DESCRIPTION DESCRIZIONE	703	704	706		Pos. N.	DESCRIPTION DESCRIZIONE	703	704	706		Pos. N.	DESCRIPTION DESCRIZIONE	703	704	706	
1	OIL PRESSURE VALVE		1			8	SCREW		2			17	VACUUM PUMP ASSY		1			26	O RING		3		
2	PLUG		2			9	CRANKCASE ASSY		1			18	SCREW		2			27	TAPER PIN		3		
3	PLUG		4			10	CRANKCASE ASSY		1			19	ONE WAY VALVE-VAC PUMP		1			28	BALANCE SHAFT ASSY		1		
4	PLUG		2			11	CRANKCASE ASSY		1			20	ADAPTOR		1			29	SCREW		6		
5	WASHER		3			12	CRANKCASE ASSY		1			21	GASKET		1			30	PISTON OLI JET		6		
6	SCREW		1			13	BEARING ASSY - 0,00		1			22	BEARING - 0,00		1			31	BEARING + 0.00		3		
7	DRIVING GEAR ASSY		1			14	BEARING ASSY - 0,25		1			23	BEARING - 0,25		1			32	BEARING + 0.25		3		
						15	O RING		1			24	BEARING - 0,00		1			33	BEARING + 0.00		3		
						16	VACUUM PUMP ASSY		1			25	BEARING - 0,25		1			34	BEARING + 0.25		3		