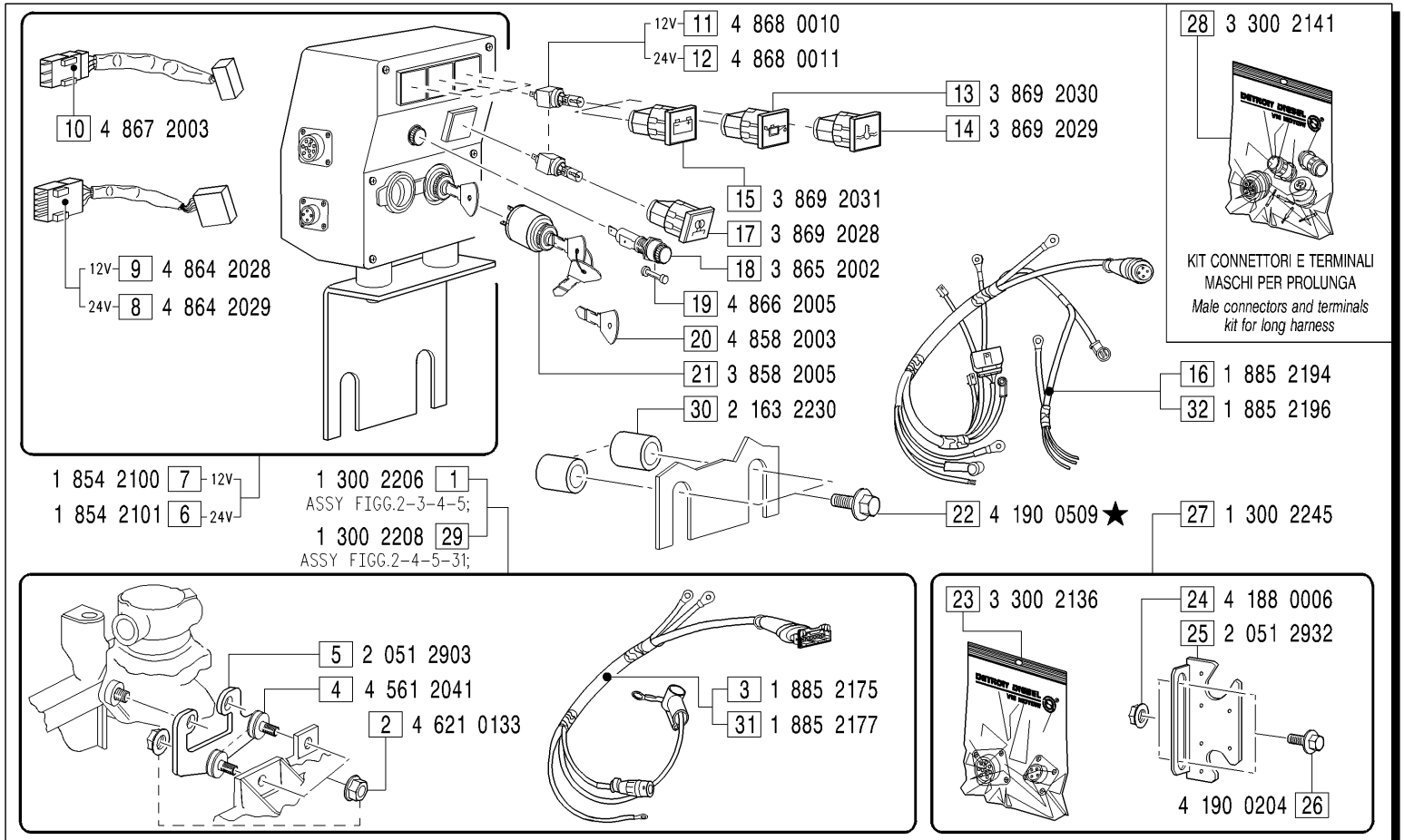

GRUPPO CABLAGGIO E CRUSCOTTO - *Dashboard and wiring harness group*

CAB0004: FIGG.27-29-32; **CAB0005**: FIGG.1-16-27;

CRU0010: FIGG.7-29-30-22-32; **CRU0011**: FIGG.6-29-30-22-32; **CRU0012**: FIGG.1-7-16-22-30; **CRU0013**: FIGG.1-6-16-22-30;

MODIFICATIONS-MODIFICHE-ÄNDERUNGEN-MODIFICACIÓN						
Pos. N.	Code Codice	SIMBOLS SIMBOLI △	▲	⧄	EC	Up to serial nr. Fino a matricola
22	4 190 0504	X		X		

Pos. N.	DESCRIPTION DESCRIZIONE	Quantity (Q.tà) 703	704	706		Pos. N.	DESCRIPTION DESCRIZIONE	703	704	706		Pos. N.	DESCRIPTION DESCRIZIONE	703	704	706		Pos. N.	DESCRIPTION DESCRIZIONE	703	704	706	
1	KIT WIRING HARNESS ASSY	1				9	TIMER RELAY 12V	1				19	FUSE	1				29	KIT WIRING HARNESS ASSY			1	
2	NUT	4				10	POWER DISSIPATOR	1				20	SWITCH KEY	1				30	SPACER			2	
3	WIRING HARNESS 12/24V	1				11	LAMP 12V	4				21	STARTING SWITCH	1				31	WIRING HARNESS 12/24V			1	
4	VIBRATION DAMPER	2				12	LAMP 24V	4				22	SCREW	2				32	WIRING HARNESS 12/24V			1	
5	BRACKET	1				13	LAMP SOCKET	1				23	KIT ELECTRIC PANEL	1									
6	DASHBOARD ASSY 24V	1				14	LAMP SOCKET	1				24	NUT	2									
7	DASHBOARD ASSY 12V	1				15	LAMP SOCKET	1				25	BRACKET	1									
8	TIMER RELAY 24V	1				16	WIRING HARNESS 12/24V	1				26	SCREW	2									
						17	LAMP SOCKET	1				27	KIT ELECTRIC PANEL ASSY	1									
						18	FUSE HOLDER	1				28	KIT FOR LONG HARNESS	1									