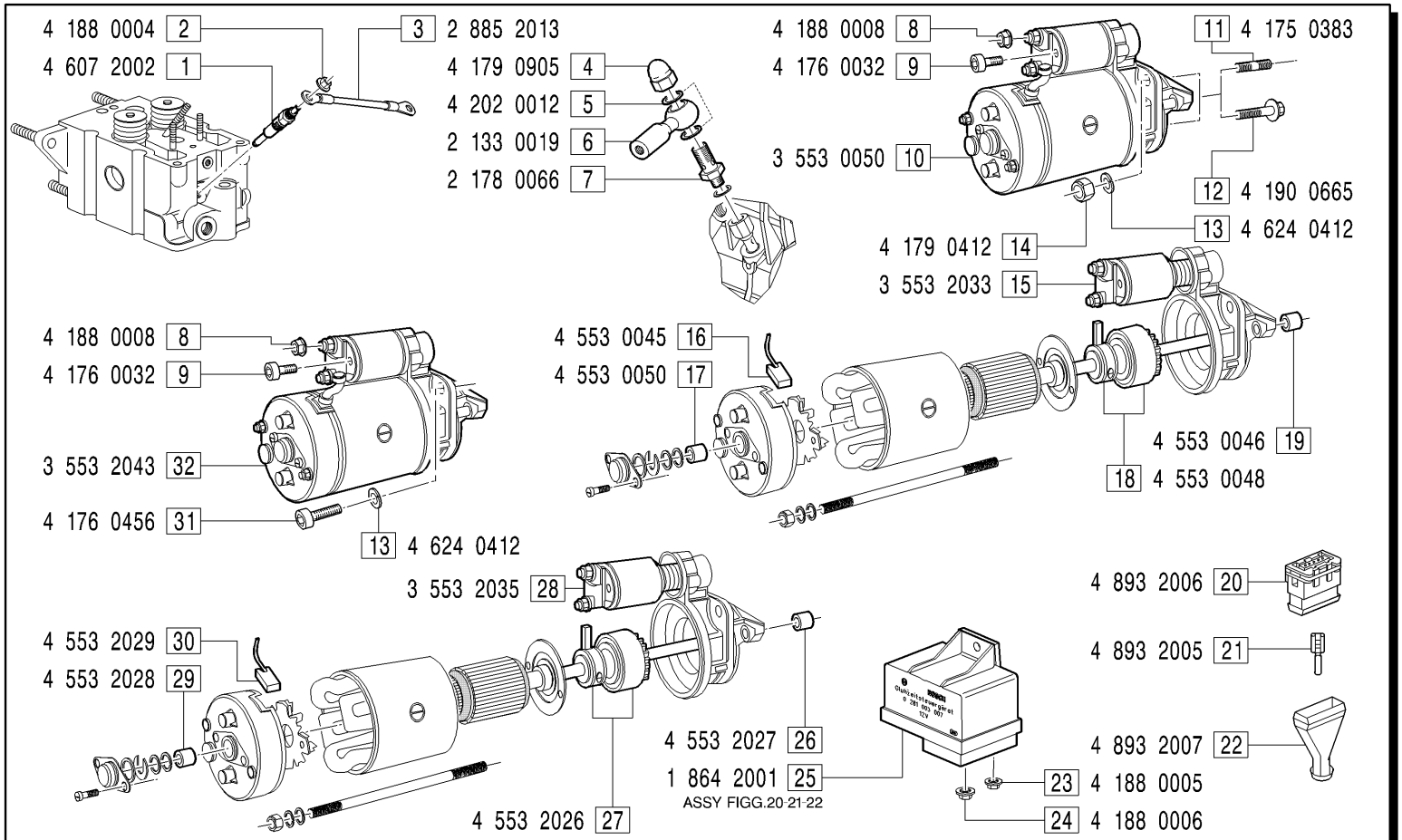

GRUPPI AVVIAMENTO ELETTRICO 12V - *Electric start groups 12V*

AVE0031: FIGG.1-2-3-8-9-13-23-24-25-31-32; **AVE0040**: FIGG.1-2-3-8-9-10-11-13-14-23-24-25; **AVE0042**: FIGG.1-2-3-4-5-6-7-8-9-13-23-24-25-31-32;
AVE0061: FIGG.1-2-3-8-9-13-31-32; **AVE0065**: FIGG.1-2-3-4-5-6-7-8-9-10-12-23-24-25; **AVE0069**: FIGG.1-2-3-8-9-10-12-23-24-25;
AVE0077: FIGG.1-2-3-4-5-6-7-8-9-10-11-13-14-23-24-25;

MODIFICATIONS MODIFICHE ÄNDERUNGEN MODIFICACIÓN

Pos. N.	Code Codice	SIMBOLS SIMBOLI △	▲	◪	EC	Up to serial nr. Fino a matricola

Pos. N.	DESCRIPTION DESCRIZIONE	Quantity (Q.tà) 703	704	706	
1	GLOW PLUG	3			
2	NUT	3			
3	ELECTROCONDUCT. CABLE	2			
4	NUT	1			
5	GASKET	2			
6	SHEAT	1			
7	ADAPTOR	1			
8	NUT	1			
9	SCREW	1			
10	STARTING MOTOR	1			
11	STUD	2			
12	SCREW	2			
13	SPRING WASHER	2			
14	NUT	2			
15	ELECTROMAGNET	1			
16	BRUSHES SET	1			
17	BUSHING	1			
18	PINION GEAR	1			
19	BUSHING	1			
20	TERMINAL BOARD	1			
21	TERMINAL	5			
22	PROTECTION CAP	1			
23	NUT	1			
24	NUT	1			
25	CONTROL UNIT	1			
26	BUSHING	1			
27	PINION GEAR	1			
28	ELECTROMAGNET	1			
29	BUSHING	1			
30	BRUSHES SET	1			
31	SCREW	2			
32	STARTING MOTOR	1			