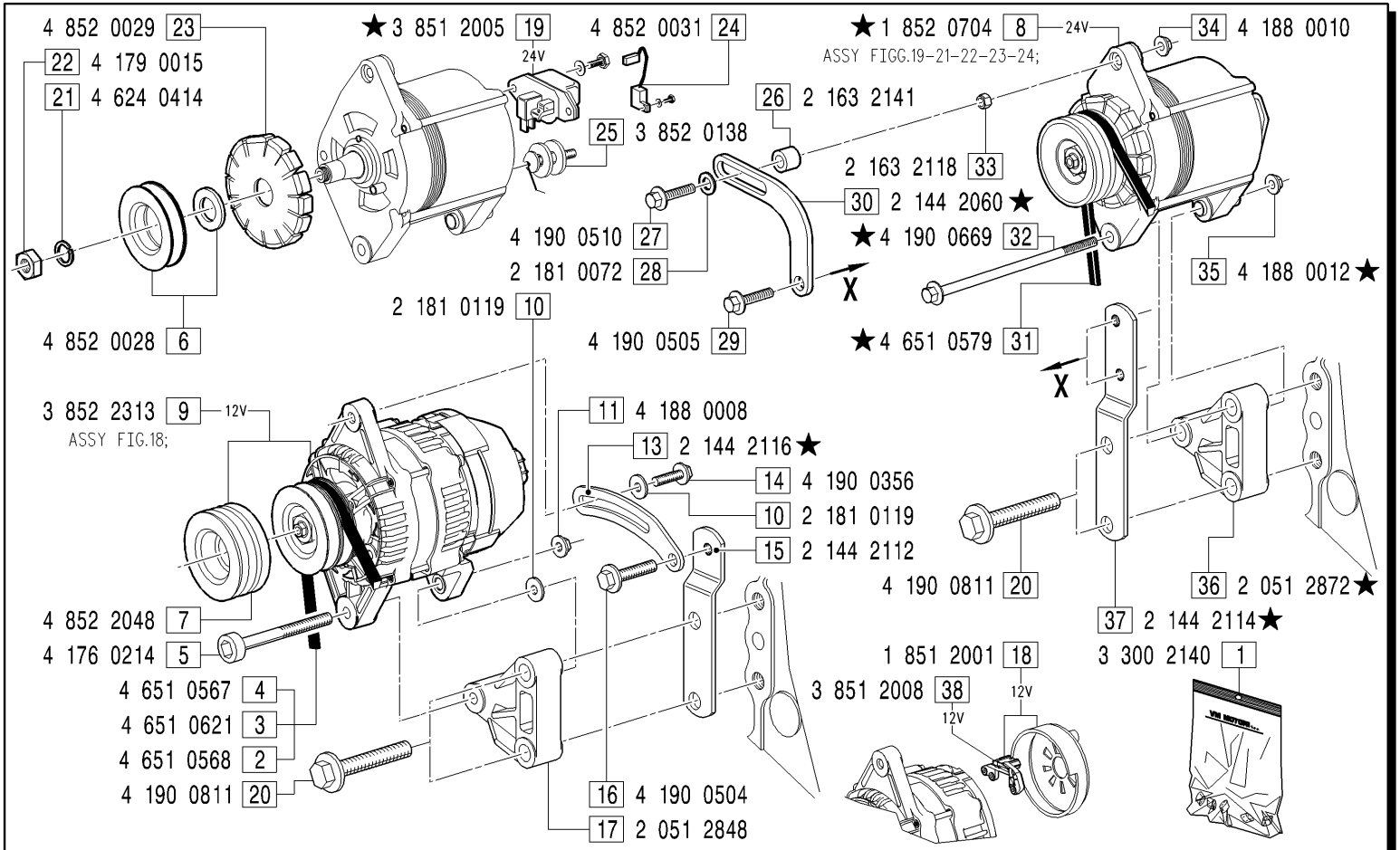

GRUPPI IMPIANTO ELETTRICO - *Electric diagram groups*

APA0023: FIGG.1-2-5-9-10-11-13-14-15-16-17-20; **APA0042**: FIGG.1-4-5-9-10-11-13-14-15-16-17-20; **APA0065**: FIGG.1-3-5-9-10-11-13-14-15-16-17-20;

APA0069: FIGG.1-4-5-9-10-11-13-14-15-16-17-20; **APA0093**: FIGG.6-8-20-26-27-28-29-30-31-32-33-34-35-36-37;

MODIFICATIONS-MODIFICHE-ÄNDERUNGEN-MODIFICACIÓN

Pos. N.	Code Codice	SIMBOLS SIMBOLI △	▲	⧄	EC	Up to serial nr. Fino a matricola
13	2 144 0099	X		X		
8	3 852 2295		X	X		APA0068
19	3 851 2009		X	X		APA0068
30	2 144 2116		X			APA0068
31	4 651 0567		X			APA0068
32	4 176 0214		X			APA0068
35	4 188 0008		X			APA0068
36	2 051 2848		X			APA0068
37	2 144 2112		X			APA0068

GRUPPI SOPPRESSI: *Groups removed for:*	SOSTITUITI DA: *Changed to:*
APA0068	APA0093

Pos. N.	DESCRIPTION DESCRIZIONE	Quantity (Q.tà) 703	704	706	
1	ALTERNATOR KIT	1			
2	BELT	1			
3	BELT	1			
4	BELT	1			
5	SCREW	1			
6	PULLEY	1			
7	PULLEY	1			
8	ALTERNATOR	1			
9	ALTERNATOR	1			
10	WASHER	2			
11	NUT	1			
13	TIE ROD	1			
14	SCREW	1			
15	TIE ROD	1			
16	SCREW	1			
17	ALTERNATOR SUPPORT	1			
18	REGULATOR KIT 12V	1			
19	REGULATOR KIT 24V	1			
20	SCREW	2			
21	WASHER	1			
22	NUT	1			
23	FAN	1			
24	CONDENSER	1			
25	KIT APPL. CLAMP	1			
26	SPACER	1			
27	SCREW	1			
28	WASHER	1			
29	SCREW	1			
30	TIE ROD	1			
31	BELT	1			
32	SCREW	1			
33	SPACER	1			
34	NUT	1			
35	NUT	1			
36	ALTERNATOR SUPPORT	1			
37	TIE ROD	1			
38	REGULATOR 12V	1			