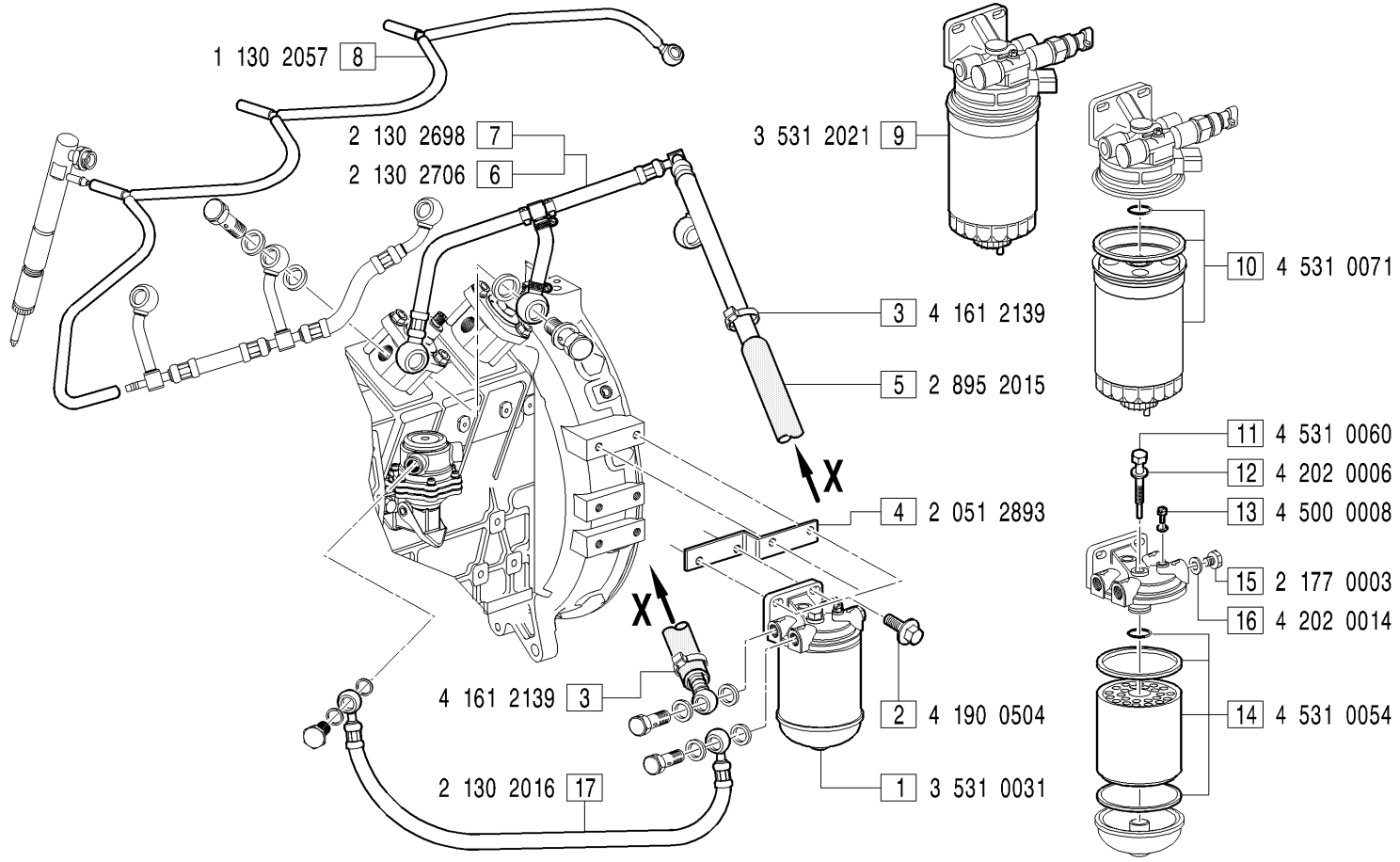

GRUPPI FILTRI NAFTA - *Fuel filter groups*

FNA0029: FIGG.1-2-3-5-6-8-15-16-17;
FNA0030: FIGG.1-2-4-7-8-15-16-17;
FNA0032: FIGG.1-2-7-8-15-16-17;
FNA0038: FIGG.7-8-9-17;
FNA0040: FIGG.1-2-6-8-15-16-17;
FNA0043: FIGG.1-2-7-8-15-16;

MODIFICATIONS-MODIFICHE-ÄNDERUNGEN-MODIFICACIÓN

Pos. N.	Code Codice	SIMBOLS SIMBOLI △	▲	⧄	EC	Up to serial nr. Fino a matricola

GRUPPI SOPPRESSI: *Groups removed for:*	SOSTITUITI DA: *Changed to:*
FNA0028	FNA0040

Pos. N.	DESCRIPTION DESCRIZIONE	Quantity (Q.tà) 703	704	706	
1	FUEL FILTER ASSY	1			
2	SCREW (FNA0029-32-40-43)	2			
2	SCREW (FNA0028-30)	4			
3	CLIP	2			
4	BRACKET	1			
5	HEAT PROTECTIVE	1			
6	PIPE	1			
7	PIPE	1			
8	PIPE	1			
9	FUEL FILTER ASSY	1			
10	FUEL ELEMENT SET	1			
11	SCREW	1			
12	WASHER	1			
13	SCREW	1			
14	FUEL ELEMENT SET	1			
15	PLUG	2			
16	GASKET	2			
17	PIPE	1			