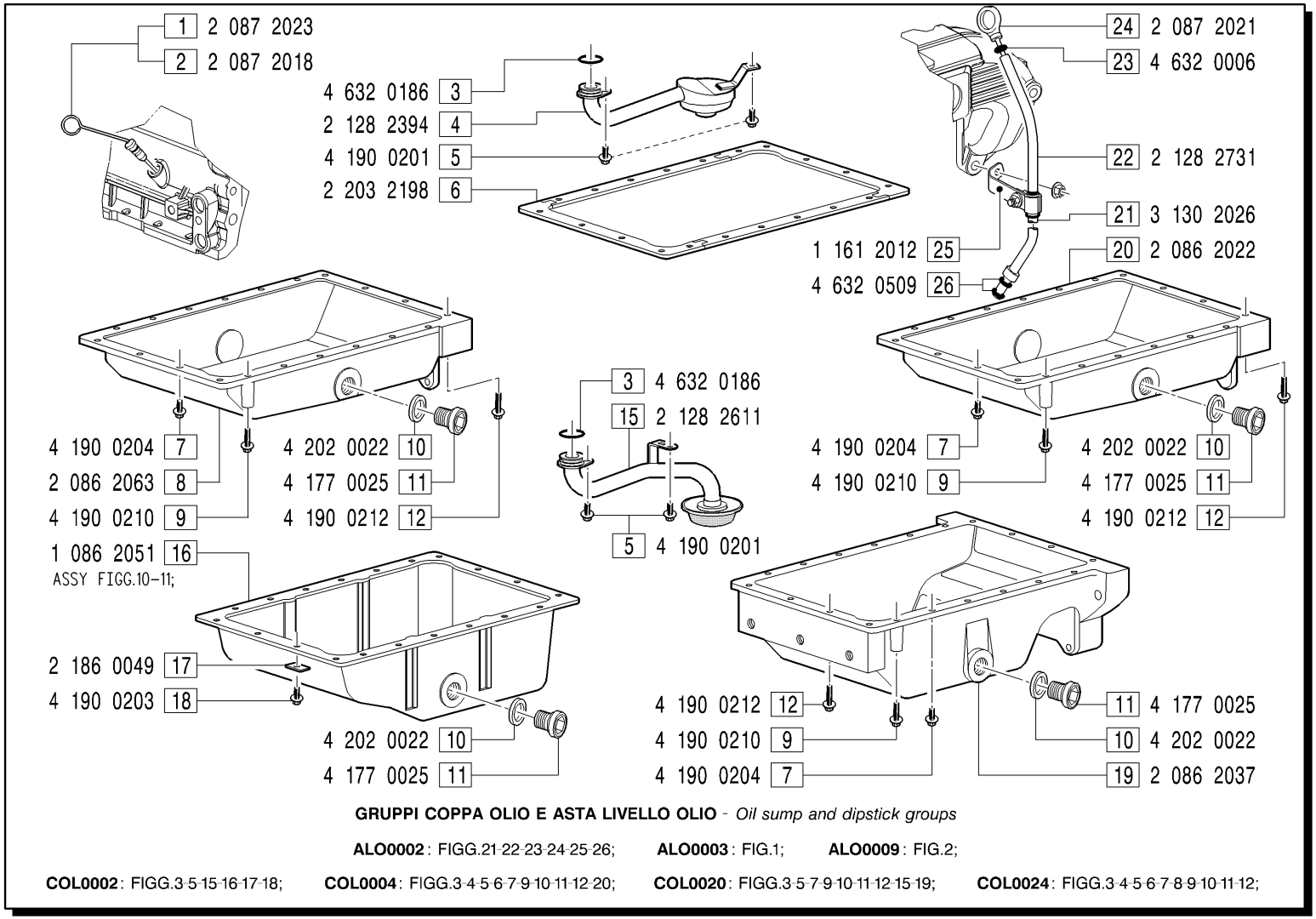

GRUPPI COPPA OLIO E ASTA LIVELLO OLIO - *Oil sump and dipstick groups*

ALO0002: FIGG.21-22-23-24-25-26; **ALO0003**: FIG.1; **ALO0009**: FIG.2;

COL0002: FIGG.3-5-15-16-17-18; **COL0004**: FIGG.3-4-5-6-7-9-10-11-12-20; **COL0020**: FIGG.3-5-7-9-10-11-12-15-19; **COL0024**: FIGG.3-4-5-6-7-8-9-10-11-12;

MODIFICATIONS-MODIFICHE-ÄNDERUNGEN-MODIFICACIÓN						
Pos. N.	Code Codice	SIMBOLS SIMBOLI △	▲	◪	EC	Up to serial nr. Fino a matricola
13	2 163 2230					TAB.35.00.110-A (CAM0028-CAM0029)
14	4 190 0511					

Pos. N.	DESCRIPTION DESCRIZIONE	Quantity (Q.tà) 703	704	706	
1	DIPSTICK	1	1		
2	DIPSTICK	1			
3	O RING	1			
4	OIL DIPPER	1			
5	SCREW	2			
6	GASKET	1			
7	SCREW (COL0004-COL0024)	17			
7	SCREW (COL0020)	11			
8	OIL SUMP	1			
9	SCREW (COL0020)	5			
9	SCREW (COL0004-COL0024)	1			
10	GASKET (COL0004-20-24)	1			
10	GASKET (COL0002)	3			
11	PLUG (COL0004-20-24)	1			
11	PLUG (COL0002)	3			
12	SCREW (COL0020)	4			
12	SCREW (COL0004-COL0024)	2			
15	OIL DIPPER	1			
16	OIL SUMP ASSY	1			
17	SAFETY PLATE	20			
18	SCREW	20			
19	OIL SUMP	1			
20	OIL SUMP	1			
21	GASKET	1	1	1	
22	TUBE	1	1	1	
23	O RING	1	1	1	
24	DIPSTICK	1	1	1	
25	CLAMP ASSY	1	1	1	
26	O RING	2	2	2	