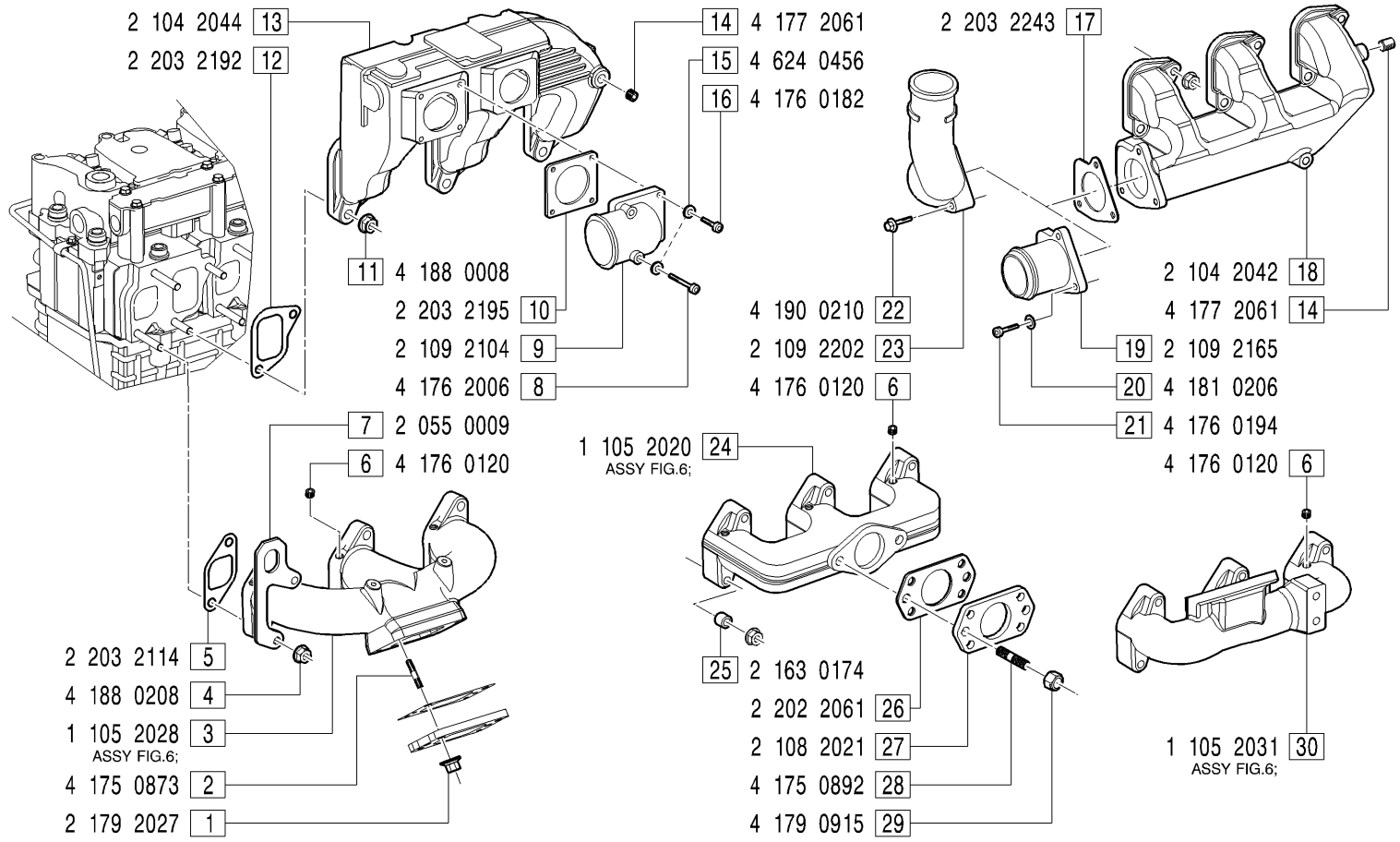

GRUPPI COLLETTORI DI ASPIRAZIONE E SCARICO - *Intake and exhaust manifolds groups*

COA0012: FIGG.11-12-14-17-18-19-20-21; **COA0013**: FIGG.8-9-10-11-12-13-14-15-16; **COA0014**: FIGG.11-12-14-17-18-22-23; **COA0017**: FIGG.11-12-13-14;

COS0009: FIGG.4-5-7-24-25-26-27-28-29; **COS0010**: FIGG.1-2-3-4-5-7-26-27; **COS0011**: FIGG.1-2-4-5-7-26-27-30; **COS0013**: FIGG.1-2-4-5-26-27-30;

MODIFICATIONS-MODIFICHE-ÄNDERUNGEN-MODIFICACIÓN

Pos. N.	Code Codice	SIMBOLS SIMBOLI △	▲	⧄	EC	Up to serial nr. Fino a matricola

Pos. N.	DESCRIPTION DESCRIZIONE	Quantity (Q.tà) 703	704	706	
1	NUT	4			
2	STUD	4			
3	EXHAUST MANIFOLD	1			
4	NUT	6			
5	GASKET	3			
6	PLUG	3			
7	LIFTING EYE	1			
8	SCREW	2			
9	SHEAT	1			
10	GASKET	1			
11	NUT	6			
12	GASKET	3			
13	INTAKE MANIFOLD	1			
14	PLUG	1			
15	SPRING WASHER	4			
16	SCREW	2			
17	GASKET	1			
18	INTAKE MANIFOLD	1			
19	SHEAT	1			
20	FLAT WASHER	3			
21	SCREW	3			
22	SCREW	3			
23	SHEAT	1			
24	EXHAUST MANIFOLD	1			
25	SPACER	6			
26	GASKET	1			
27	FLANGE	1			
28	STUD	2			
29	NUT	2			
30	EXHAUST MANIFOLD	1			