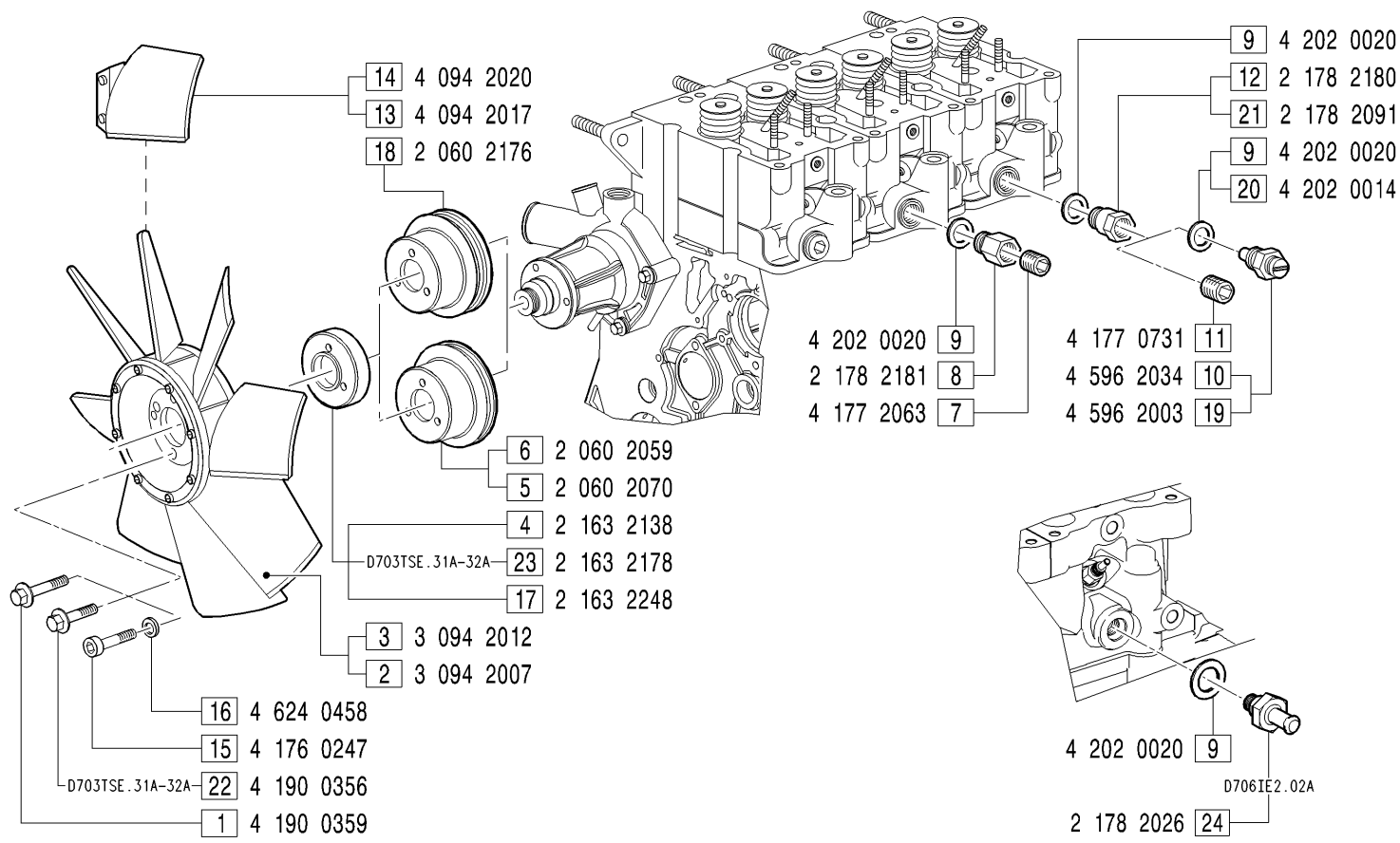

GRUPPI VENTOLE, RACCORDI E TRASMETTITORI - *Fans, union and trasmitter groups*

VER0023: FIGG.1-2-4-5; **VER0029**: FIGG.1-2-4-6; **VER0033**: FIGG.3-15-16-17-18;

RTT0003: FIGG.7-8-9-10-12; **RTT0004**: FIGG.9-10-11-12; **RTT0006**: FIGG.19-20-21; **RTT0007**: FIGG.7-8-9;

MODIFICATIONS-MODIFICHE-ÄNDERUNGEN-MODIFICACIÓN						
Pos. N.	Code Codice	SIMBOLS SIMBOLI △	▲	⧄	EC	Up to serial nr. Fino a matricola

Pos. N.	DESCRIPTION DESCRIZIONE	Quantity (Q.tà) 703	704	706	
1	SCREW	3			
2	FAN	1			
3	FAN	1			
4	SPACER	1			
5	PULLEY	1			
6	PULLEY	1			
7	PLUG	1			
8	UNION	1			
9	GASKET (RTT0003-07)	1			
9	GASKET (RTT0004)	2			
10	TRASMITTER	1			
11	PLUG	1			
12	UNION (RTT0003)	1			
12	UNION (RTT0004)	2			
13	FAN BLADE (VER0023-29)	8			
14	FAN BLADE (VER0033)	8			
15	SCREW	3			
16	WASHER	3			
17	SPACER	1			
18	PULLEY	1			
19	TRASMITTER		1		
20	GASKET		1		
21	UNION		1		
22	SCREW	3			
23	SPACER	1			
24	UNION			1	