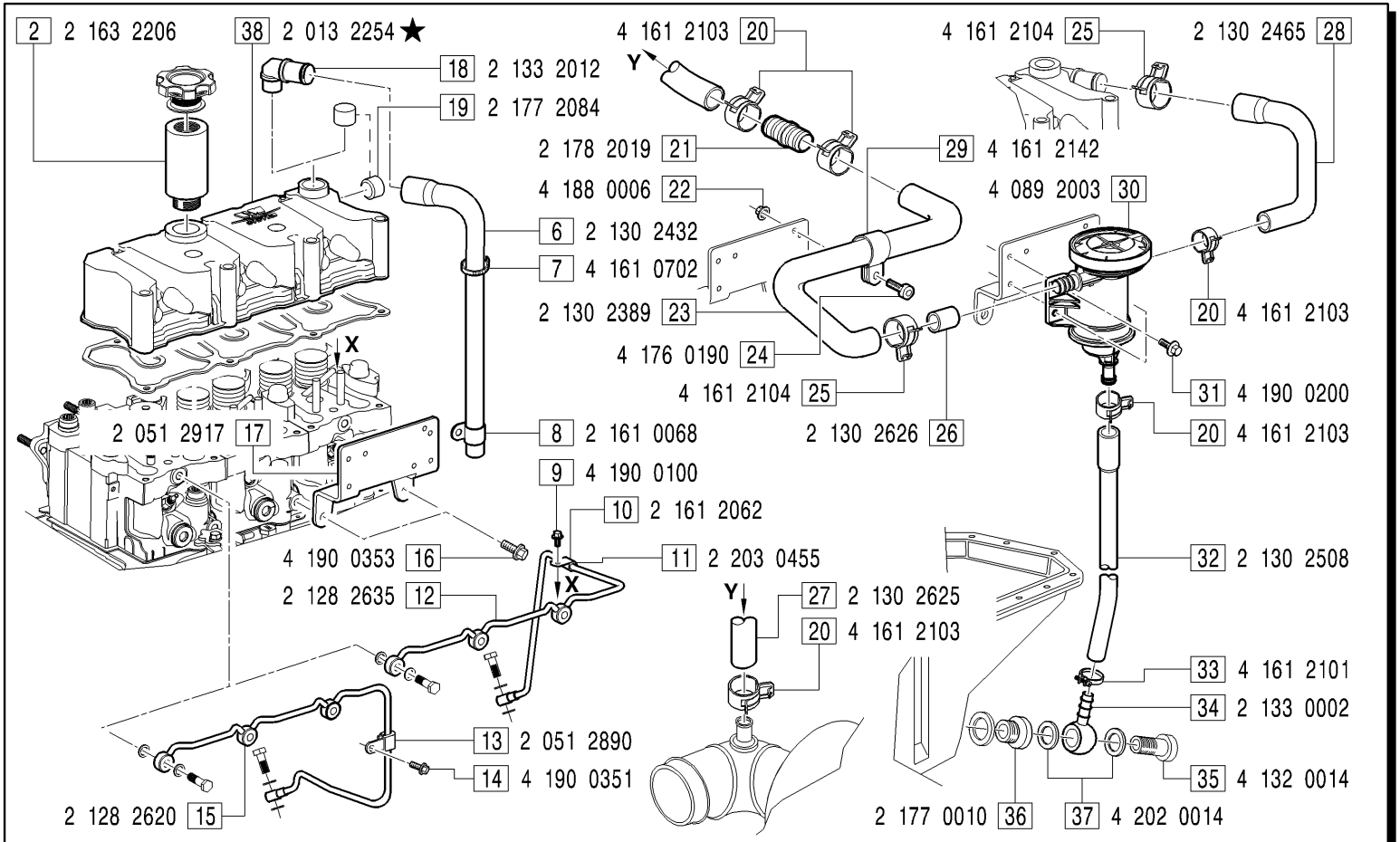

GRUPPI COPERCHI BILANCIERI - *Rocher arm covers groups*

COB0010: FIGG.6-7-8-13-14-15-18-19-38; **COB0011**: FIGG.6-7-8-13-14-15-18-19-38; **COB0012**: FIGG.13-14-15-16-17-18-19-20-21-22-23-24-25-26-27-28-29-30-31-32-33-34-35-36-37-38;
COB0013: FIGG.6-7-8-9-10-11-12-18-19-38; **COB0015**: FIGG.2-6-7-8-13-14-15-18-19-38; **COB0031**: FIGG.13-14-15-19-38;

MODIFICATIONS-MODIFICHE-ÄNDERUNGEN-MODIFICACIÓN

Pos. N.	Code Codice	SIMBOLS SIMBOLI △	▲	⧄	EC	Up to serial nr. Fino a matricola
38	2 013 2289	X		X		
	2 013 2234	X		X		
	2 013 2269	X		X		
	2 013 2363	X		X		

GRUPPI SOPPRESSI: *Groups removed for:*	SOSTITUITI DA: *Changed to:*
COB0023	COB0010

Pos. N.	DESCRIPTION DESCRIZIONE	Quantity (Q.tà) 703	704	706	
2	SPACER	1			
6	PIPE	1			
7	CLIP	1			
8	CLIP	1			
9	SCREW	1			
10	CLIP	1			
11	GASKET	1			
12	LUBRIFICATION TUBE	1			
13	CLIP	1			
14	SCREW	1			
15	LUBRIFICATION TUBE	1			
16	SCREW	2			
17	BRACKET	1			
18	SHEAT	1			
19	PLUG (COB0010-11-12-13-15)	1			
19	PLUG (COB0031)	2			
20	CLAMP	5			
21	UNION	1			
22	NUT	1			
23	PIPE	1			
24	SCREW	1			
25	CLAMP	2			
26	PIPE	1			
27	PIPE	1			
28	PIPE	1			
29	CLAMP	1			
30	OIL SEPARATOR	1			
31	SCREW	3			
32	PIPE	1			
33	CLAMP	1			
34	SHAFT	1			
35	UNION SCREW	1			
36	UNION	1			
37	GASKET	2			
38	ROCKER OIL FEED PIPE	1			