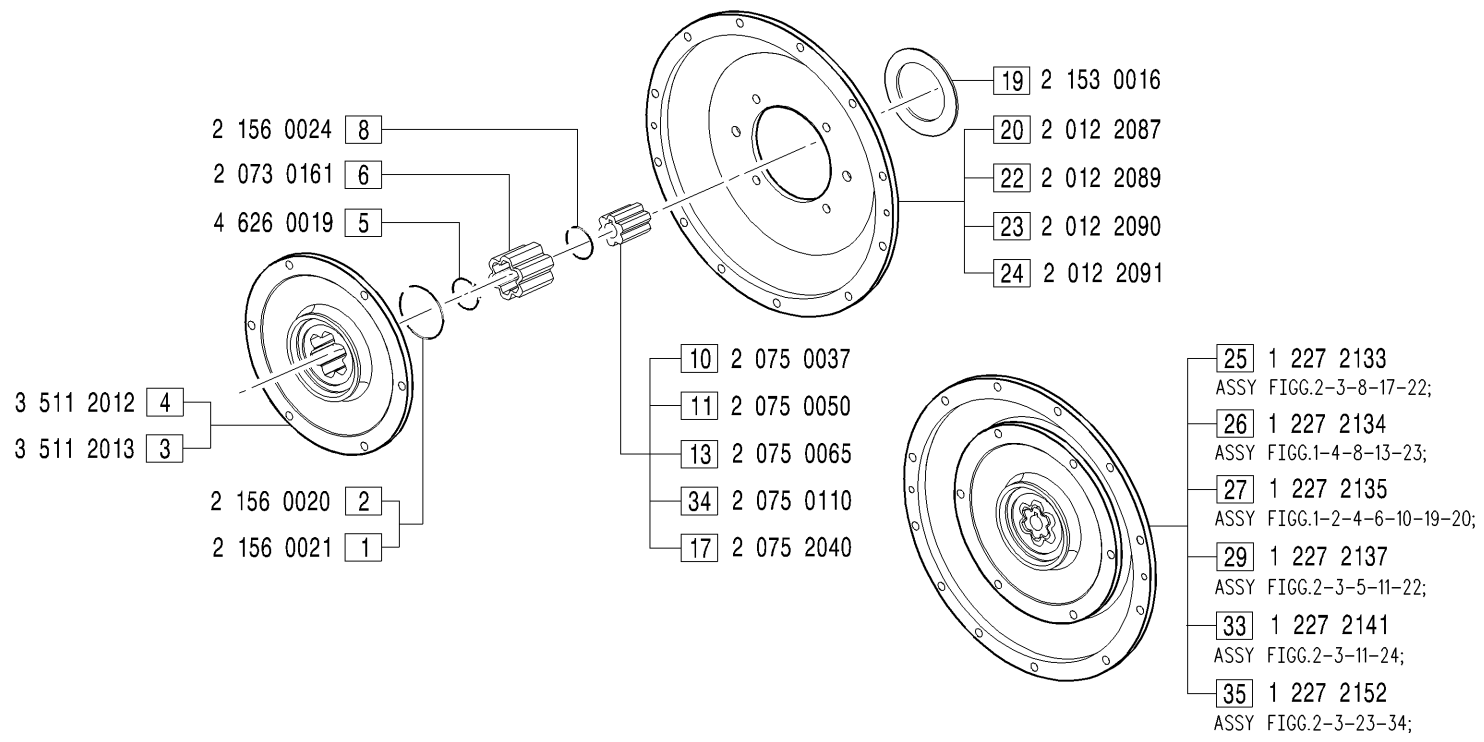

GRUPPI PREDISPOSIZIONI PRESE DI FORZA POSTERIORI - *Rear P.t.O.'s groups*

PRD0002: FIG.29; **PRD0004**: FIG.25; **PRD0005**: FIG.26; **PRD0007**: FIG.33; **PRD0009**: FIG.27; **PRD0010**: FIG.35;

MODIFICATIONS MODIFICHE ÄNDERUNGEN MODIFICACIÓN

Pos. N.	Code Codice	SIMBOLS SIMBOLI △	▲	⧄	EC	Up to serial nr. Fino a matricola
7	2 073 0141			X		
9	2 156 0019			X		
15	2 075 0068			X		
22	1 227 2136			X		
	(PRD0001)			X		
12	2 075 0062			X		
32	1 227 2140			X		
	(PRD0006)			X		
14	2 075 0066			X		
31	1 227 2139			X		
	(PRD0003)			X		
16	2 075 0111			X		
18	2 153 0015			X		
21	2 012 2088			X		
30	1 227 2138			X		
	(PRD0008)			X		

Pos. N.	DESCRIPTION DESCRIZIONE	Quantity (Q.tà) 703	704	706
1	LOCK RING	1	1	1
2	LOCK RING	1	1	1
3	FLEXIBLE COUPLING	1	1	1
4	FLEXIBLE COUPLING	1	1	1
5	SEEGER	1	1	1
6	COUPLING	1	1	1
8	LOCK RING	1	1	1
10	PUMP SLEEVE	1	1	1
11	PUMP SLEEVE	1	1	1
13	PUMP SLEEVE	1	1	1
17	PUMP SLEEVE	1	1	1
19	PILOY RING	1	1	1
20	HOUSING PUMP	1	1	1
22	HOUSING PUMP	1	1	1
23	HOUSING PUMP	1	1	1
24	HOUSING PUMP	1		1
25	ADAPTER ASSY	1	1	1
26	ADAPTER ASSY	1	1	1
27	ADAPTER ASSY	1	1	1
29	ADAPTER ASSY	1	1	1
33	ADAPTER ASSY	1		1
34	PUMP SLEEVE	1	1	1
35	ADAPTER ASSY	1	1	1