D 703 TE1 / TE2 / TSE1 / E2 - D 704 TE2 - D 706 IE2

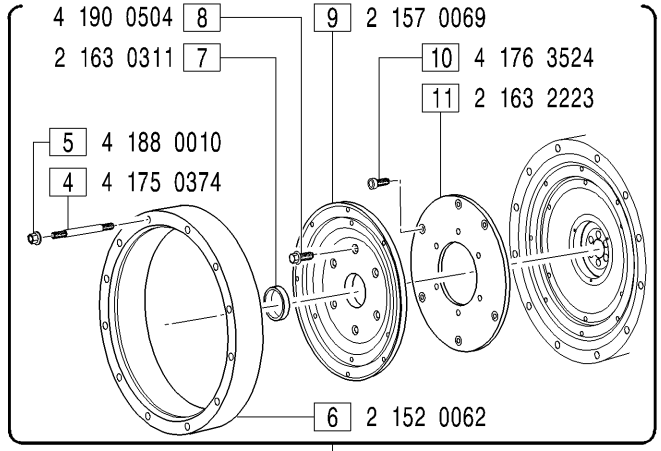

12 1 227 2147

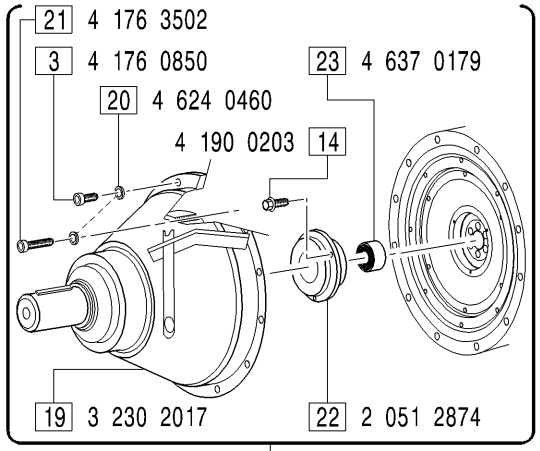

24 1 227 2142

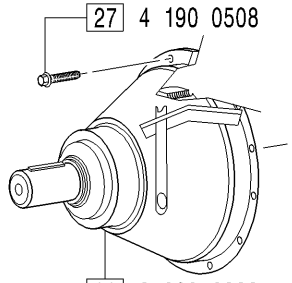

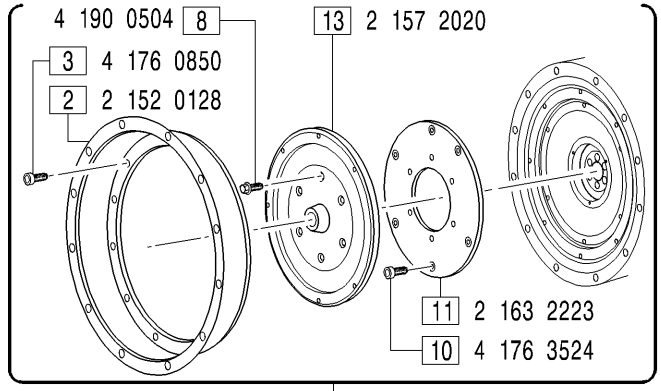

1 1 227 2150

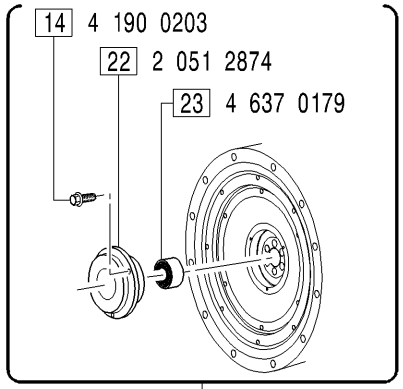

26 1 227 2168

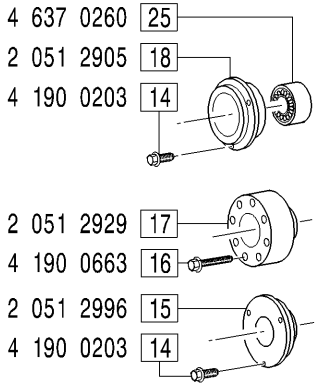

GRUPPI PREDISPOSIZIONI FRIZIONI - *Clutches P.t.O. groups*

FRI0003: FIG.12; **FRI0004**: FIG.1; **FRI0005**: FIG.26; **FRI0006**: FIGG.14-18-25;
FRI0007: FIG.24; **FRI0008**: FRI0006+FIGG.27-28; **FRI0009**: FIGG.16-17; **FRI0010**: FIGG.14-15;

MODIFICATIONS MODIFICHE ÄNDERUNGEN MODIFICACIÓN						
Pos. N.	Code Codice	SIMBOLS SIMBOLI △	▲	⧄	EC	Up to serial nr. Fino a matricola

Pos. N.	DESCRIPTION DESCRIZIONE	Quantity (Q.tà) 703	704	706	
1	APPLICATION ASSY	1	1	1	
2	ADAPTOR	1	1	1	
3	SCREW	12	12	12	
4	STUD	12	12	12	
5	NUT	12	12	12	
6	RING	1	1	1	
7	SPACER	1	1	1	
8	SCREW	6	6	6	
9	CLUTCH UNION DISC	1	1	1	
10	SCREW	6	6	6	
11	SPACER	1	1	1	
12	APPLICATION ASSY	1	1	1	
13	CAPSTAN DISC	1	1	1	
14	SCREW	3	3	3	
15	BEARING SUPPORT	1	1	1	
16	SCREW	8	8	8	
17	BEARING SUPPORT	1	1	1	
18	BEARING SUPPORT	1	1	1	
19	CLUTCH	1	1		
20	WASHER	20	20		
21	SCREW	8	8		
22	BEARING SUPPORT	1	1		
23	BEARING	1	1		
24	APPLICATION ASSY	1	1		
25	BEARING	1	1	1	
26	APPLICATION ASSY	1			
27	SCREW			20	
28	CLUTCH			1	