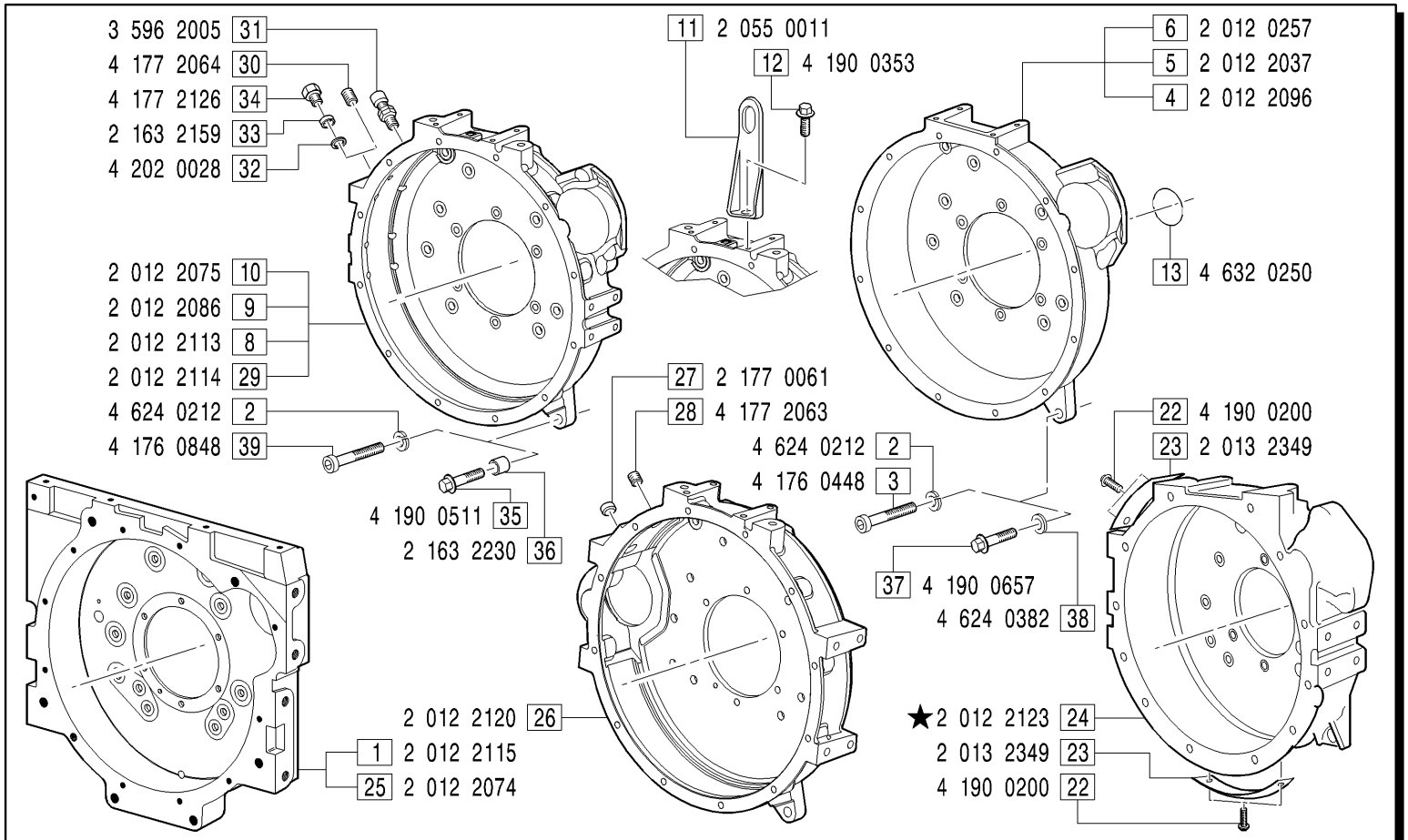

GRUPPI CAMPANA - *Flywheel housing groups*

CAM0001: FIGG.10-13; **CAM0002**: FIGG.4-13; **CAM0003**: FIGG.13-22-23-24; **CAM0006**: FIGG.6-13; **CAM0007**: FIGG.9-11-12-13;
CAM0009: FIGG.2-3-5-11-12-13; **CAM0012**: FIGG.9-11-12-13-39; **CAM0015**: FIGG.13-29-32-33-34; **CAM0016**: FIGG.8-11-12-13-39; **CAM0017**: FIGG.10-11-12-13;
CAM0018: FIGG.1-13; **CAM0019**: FIGG.8-11-12-13; **CAM0021**: FIGG.13-25; **CAM0023**: FIGG.13-29-30-31; **CAM0024**: FIGG.7-13-26-27-28;
CAM0026: FIGG.6-13-37-38; **CAM0028**: FIGG.10-13-35-36; **CAM0029**: FIGG.10-11-12-13-35-36;

MODIFICATIONS-MODIFICHE-ÄNDERUNGEN-MODIFICACIÓN

Pos. N.	Code Codice	SIMBOLS SIMBOLI △	▲	⧄	EC	Up to serial nr. Fino a matricola
7	4 188 0008				X	Vedi: TAB.03.00.110-A
14	4 629 0208					
15	4 634 0869					
16	2 030 2064					
17	2 030 2065					
18	4 632 0530					
19	1 052 2028					
20	1 052 2030					
21	4 175 0870					
24	2 012 2103	X		X		

Pos. N.	DESCRIPTION DESCRIZIONE	Quantity (Q.tà) 703	704	706	
1	FLYWHEEL HOUSING	1	1		
2	SPRING WASHER	2			
3	SCREW	2	2		
4	FLYWHEEL HOUSING	1	1	1	
5	FLYWHEEL HOUSING	1			
6	FLYWHEEL HOUSING	1			
8	FLYWHEEL HOUSING	1	1		
9	FLYWHEEL HOUSING	1	1		
10	FLYWHEEL HOUSING	1	1	1	
11	LIFTING EYE	1	1		
12	SCREW	1	1		
13	O RING	1	1	1	
22	SCREW	4	4	4	
23	LOCKUP PLAQUE	2	2	2	
24	FLYWHEEL HOUSING	1	1	1	
25	FLYWHEEL HOUSING	1			
26	FLYWHEEL HOUSING		1		
27	PLUG		1		
28	PLUG		1		
29	FLYWHEEL HOUSING	1	1	1	
30	PLUG			1	
31	PICK-UP			1	
32	GASKET	1	1	1	
33	SPACER	1	1	1	
34	PLUG	1	1	1	
35	SCREW	2			
36	WASHER	2			
37	SCREW	2			
38	WASHER	2			
39	SCREW	2			