Gruppo base - *Common items*

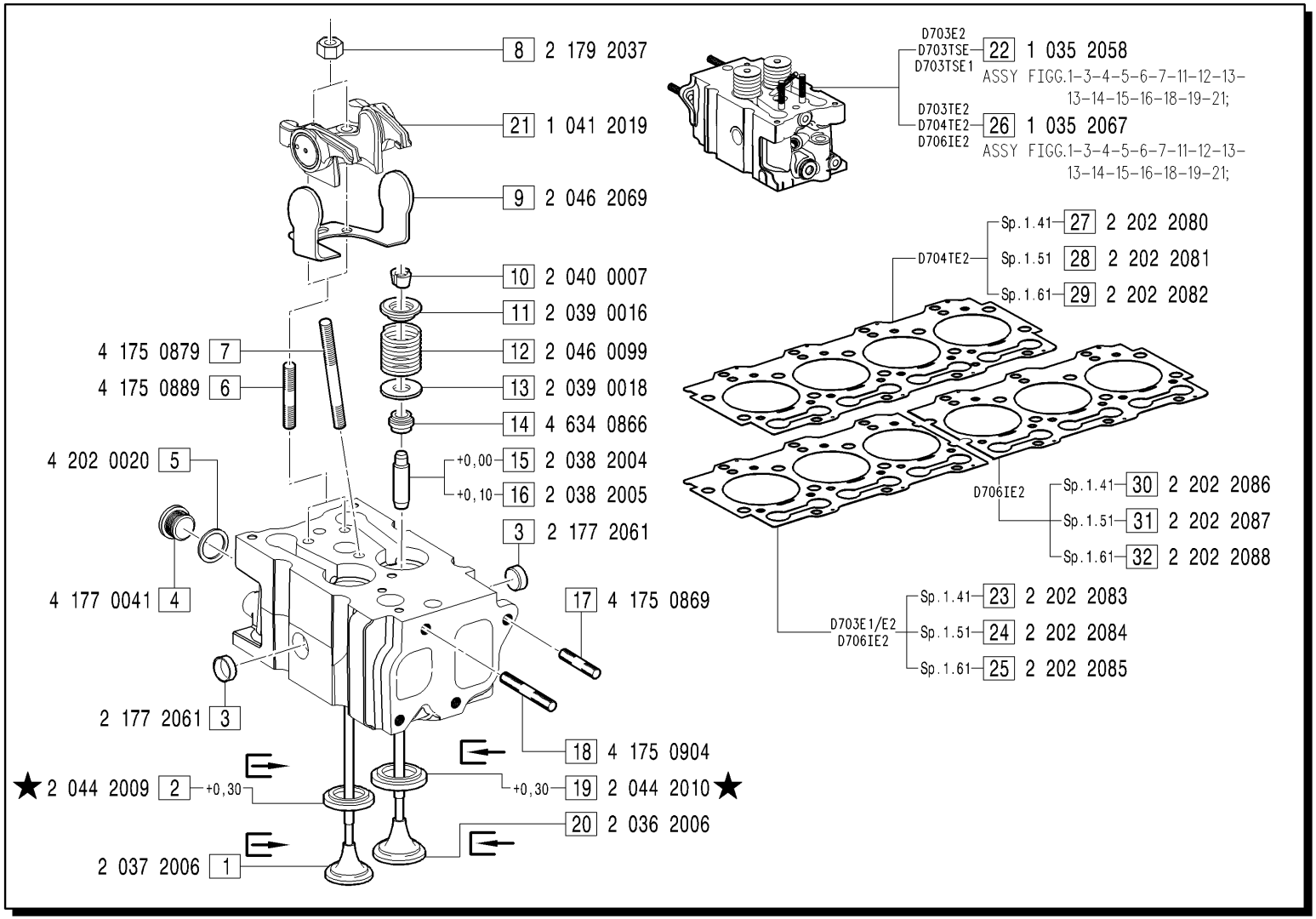

MODIFICATIONS-MODIFICHE-ÄNDERUNGEN-MODIFICACIÓN						
Pos. N.	Code Codice	SIMBOLS SIMBOLI △	▲	⧄	EC	Up to serial nr. Fino a matricola
2	2 044 2007				X	
19	2 044 2008				X	

Pos. N.	DESCRIPTION DESCRIZIONE	Quantity (Q.tà) 703	704	706		Pos. N.	DESCRIPTION DESCRIZIONE	703	704	706		Pos. N.	DESCRIPTION DESCRIZIONE	703	704	706		Pos. N.	DESCRIPTION DESCRIZIONE	703	704	706	
1	EXHAUST VALVE	3	4	6		9	SPRING	3	4	6		19	INTAKE VALVE SEAT +0.30	3	4	6		29	CYL. HEAD GASKET SP.1.61		1		
2	EXHAUST VALVE SEAT +0.30	3	4	6		10	HALF COLLET	12	16	24		20	INTAKE VALVE	3	4	6		30	CYL. HEAD GASKET SP.1.41			1	
3	PLUG	6	8	12		11	UPPER SPRING PLATE	6	8	12		21	ROCKER ARM ASSY	3	4	6		31	CYL. HEAD GASKET SP.1.51			1	
4	PLUG	3	4	6		12	SPRING	6	8	12		22	CYLINDER HEAD ASSY	3	4	6		32	CYL. HEAD GASKET SP.1.61			1	
5	GASKET	3	4	6		13	LOWER SPRING PLATE	6	8	12		23	CYL. HEAD GASKET SP.1.41	1		1							
6	STUD	6	8	12		14	SEAL RING	6	8	12		24	CYL. HEAD GASKET SP.1.51	1		1							
7	STUD	3	4	6		15	VALVE GUIDE +0.00	6	8	12		25	CYL. HEAD GASKET SP.1.61	1		1							
8	NUT	6	8	12		16	VALVE GUIDE +0.10	6	8	12		26	CYLINDER HEAD ASSY	3	4	6							
						17	STUD	6	8	12		27	CYL. HEAD GASKET SP.1.41		1								
						18	STUD	6	8	12		28	CYL. HEAD GASKET SP.1.51		1								