Gruppo base - *Common items*

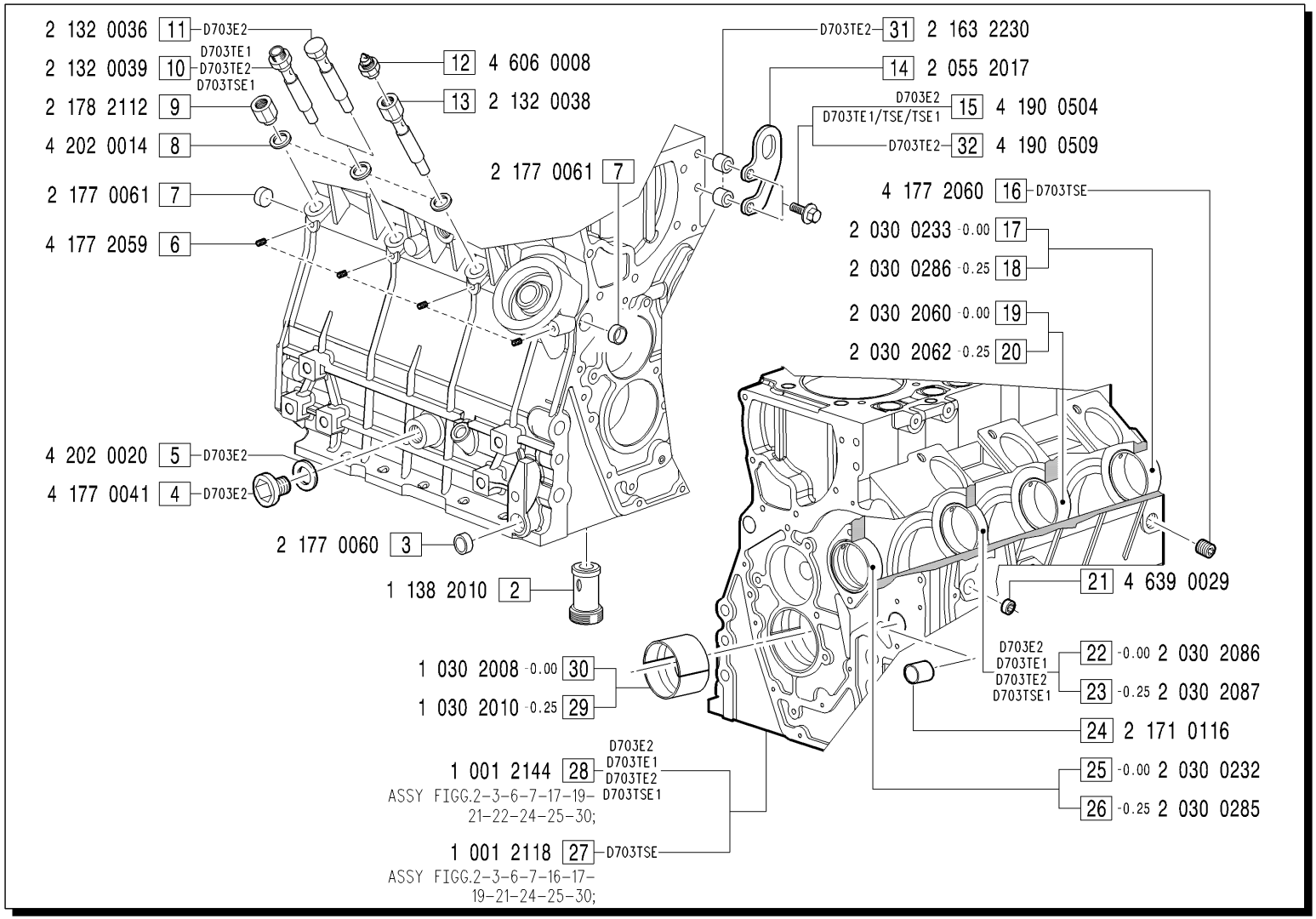

MODIFICATIONS MODIFICHE ÄNDERUNGEN MODIFICACIÓN					
Pos. N.	Code Codice	SIMBOLS SIMBOLI △	▲	⧄	EC	Up to serial nr. Fino a matricola
1	4 245 2002			X		

Pos. N.	DESCRIPTION DESCRIZIONE	Quantity (Q.tà) 703	704	706	
2	OIL PRESSURE VALVE	1			
3	PLUG	1			
4	PLUG	1			
5	GASKET	1			
6	PLUG	4			
7	PLUG	2			
8	GASKET	3			
9	UNION	1			
10	ADAPTOR BOLT	1			
11	ADAPTOR BOLT	1			
12	OIL PRESSURE TRASMITTER	1			
13	ADAPTOR BOLT	1			
14	LIFTING EYE	1			
15	SCREW	2			
16	PLUG	1			
17	BEARING -0.00	1			
18	BEARING -0.25	1			
19	BEARING .0,00	1			
20	BEARING -0.25	1			
21	BUSHING	1			
22	BEARING -0.00	1			
23	BEARING -0.25	1			
24	BUSHING	1			
25	BEARING -0.00	1			
26	BEARING 0.25	1			
27	CRANKCASE ASSY	1			
28	CRANKCASE ASSY	1			
29	BEARING -0.25	1			
30	BEARING -0.00	1			
31	SPACER	2			
32	SCREW	2			